LOCATION					TIME		SUB-CATCHMENT RUNOFF						INLET DESIGN							DRAIN DESIGN															HEADLOSSES										PART FULL		DESIGN LEVELS						
					tc	I	C10	C	A	C×A	+CA	Q					Qg	Qb		tc	I	+CA	Qt	Qm	Qs	Qp	L	S		V	T			V2/2g	Ku	hu	Kl	hl	Kw	hw	Sf	hf		Vp								
DESIGN ARI	STRUCTURE No.	DRAIN SECTION	SUB-CATCHMENTS CONTRIBUTING	LAND USE	SLOPE OF CATCHMENT	SUB-CATCHMENT TIME OF CONC.	RAINFALL INTENSITY	10yr RUNOFF CO-EFFICIENT	CO-EFFICIENT OF RUNOFF	SUB-CATCHMENT AREA	EQUIVALENT AREA	SUM OF (C x A)	SUB-CATCHMENT DISCHARGE	FLOW IN K&C (INC. BYPASS)	ROAD GRADE AT INLET	MINOR FLOW ROAD CAPACITY	INLET TYPE	FLOW INTO INLET	BYPASS FLOW	BYPASS STRUCTURE No.	CRITICAL TIME OF CONC.	RAINFALL INTENSITY	TOTAL (C x A)	MAJOR TOTAL FLOW	MAJOR SURFACE FLOW CAPACITY	MAJOR SURFACE FLOW	PIPE FLOW	REACH LENGTH	PIPE GRADE	PIPE / BOX DIMENSIONS (CLASS)	FLOW VELOCITY FULL (PIPE GRADE VELOCITY)	TIME OF FLOW IN REACH	STRUCTURE CHART No.	STRUCTURE RATIOS FOR 'K' VALUE CALCULATIONS	VELOCITY HEAD	U/S HEADLOSS COEFFICIENT	U/S PIPE STRUCT. HEADLOSS	LAT. HEADLOSS CO-EFFICIENT	LAT. PIPE STRUCT. HEADLOSS	W.S.E CO-EFFICIENT	CHANGE IN W.S.E	PIPE FRICTION SLOPE	PIPE FRICTION HEADLOSS (L x Sf)	DEPTH	VELOCITY	OBVERT LEVELS	DRAIN SECTION H.G.L	UPSTREAM H.G.L	LAT. H.G.L	W.S.E.	SURFACE OR K&C INVERT LEVEL	STRUCTURE No.
yrs					%	min	mm/h			ha	ha	ha	l/s	l/s	%	l/s		l/s	l/s	min	mm/h	ha	l/s	l/s	l/s	l/s	m	%	mm	m/s	min		m		m		m		m	%	m	m	m/s	m	m	m	m	m	m	
10 100	3A/5	3A/5 to 3B/5	3A/5			5.00 5.00	202 272		0.85 1.00	0.267 0.267	0.227 0.267	0.227 0.267	127 202 FLOW WIDTH/DEPTH 0.285Dp m	127	1.00	294.5	265.3	127	0		5.00 5.00	202 272	0.227 0.267	202			127 (Pipe flow= Grate flow)	4.450	1.57	450(2)	0.86 (2.25)	0.07		Qg 0.127 Qa 0.127 Da 450.000 CHRT 32: Vo2/2gDa 0.07 H/Do Kg side flow 8.59 end flow 6.44 Part full downstream pipe	0.033	1.00	0.037	Upstream HGL 20.552 below outlet pipe obv 20.570 Set Kp to 1		1.00	0.037	0.20	0.009	0.185	2.06	20.570 20.500	20.595 20.506	20.552		20.552	21.627	3A/5
10 100	3B/5	3B/5 to 3C/5	3A/5;3B/5			5.00 5.00	202 272		0.85 1.00	0.004 0.004	0.003 0.004	0.003 0.004	2 3 FLOW WIDTH/DEPTH 0.033Dp m	2	1.00	280	105.14	2	0		5.07 5.07	202 271	0.230 0.271	204			129 (Pipe flow= Sum upstr atten flows)	11.136	1.80	450(2)	0.91 (2.40)	0.19		Qg 0.002 Qa 0.129 Da 450.000 CHART 34 Angle 19 Case 3 S/Do 2.5 Du/Do 1.00 Qg/Do 0.02 K 0.33 S/Do 1.12 cor 6.03 Ku 0.36 Kw 0.36	0.033	0.36	0.012			0.36	0.012	0.21	0.023			20.450 20.250	20.494 20.471	20.506		20.506	21.301	3B/5
10 100	3C/5	3C/5 to 3/5	3A/5;3B/5;3C/5			5.00 5.00	202 272		0.85 1.00	0.106 0.106	0.090 0.106	0.090 0.106	51 80 FLOW WIDTH/DEPTH 1.473Dp m	71	0.50	280	105.14	71	0		5.26 5.26	199 268	0.320 0.377	281			197 (Pipe flow= Sum upstr atten flows)	17.916	0.56	450(2)	1.24 (1.34)	0.24		Qg 0.018 Qa 0.197 Da 450.000 Angle 79 Chart 47 S/Do 2.5 chart Du/Do 1.00 K0 1.92 K0.5 2.12 Qu/Do 0.65 Cg 0.78 K 2.08 S/Do 2.0 K0 2.44 K0.5 2.40 K 2.41 S/Do 1.5 K0 2.67 K0.5 2.58 K 2.60	0.078	2.20	0.172	Interp val for S/Do 1.60 Kw 2.55 CHART 46 S/Do 2.0 K0 2.04 K0.5 1.92 K 1.95 S/Do 1.5 K0 2.09 K0.5 2.31 K 2.26 Interp val for S/Do 1.60 Ku 2.28		2.56	0.200	0.48	0.086			20.230 20.130	20.299 20.213	20.471		20.499	20.964	3C/5
10 100	1/5	1/5 to 2/5	1/5			5.00 5.00	202 272		0.85 1.00	0.088 0.088	0.075 0.088	0.075 0.088	42 66 FLOW WIDTH/DEPTH 0.698Wd m DOWNSTREAM 9.245m	42	4.50	308	8	22	20	3C/5	5.00 5.00	202 272	0.075 0.088	66			22 (Pipe flow= Grate flow)	17.813	2.81	375(2)	0.20 (2.66)	0.30		Qg 0.022 Qa 0.022 Da 375.000 CHRT 32: Vo2/2gDa 0.01 H/Do Kg side flow 10.71 end flow 7.49 Part full downstream pipe	0.002	1.00	0.123	Upstream HGL 21.042 below outlet pipe obv 21.225 Set Kp to 1		1.00	0.123	0.02	0.003	0.069	1.55	21.225 20.725	20.919 20.661	21.042		21.042	22.250	1/5
10 100	2/5	2/5 to 3/5	1/5;2/5			5.00 5.00	202 272		0.85 1.00	0.089 0.089	0.076 0.089	0.076 0.089	43 67 FLOW WIDTH/DEPTH 0.713Wd m DOWNSTREAM 0.272m	43	4.50	308	8	22	21	4B/5	5.30 5.30	199 268	0.151 0.177	132			43 (Pipe flow= Sum upstr atten flows)	12.611	4.92	375(2)	0.39 (3.52)	0.21		Qg 0.022 Qa 0.043 Da 375.000 Angle 73 Chart 43 S/Do 2.5 chart Du/Do 1.00 K0 1.35 K0.5 1.93 Qu/Do 0.58 Cg 1.00 K 1.92 S/Do 2.0 K0 1.41 K0.5 2.25 K 2.25 S/Do 1.5 K0 1.58 K0.5 2.53 K 2.53 Interp val for S/Do 1.06 Kw 2.77 CHART 42	0.008	1.00	0.276	S/Do 2.0 K0 1.35 K0.5 2.10 K 2.19 S/Do 1.5 K0 1.53 K0.5 2.11 K 2.11 Interp val for S/Do 1.06 Ku 2.24 Part full downstream pipe Upstream HGL 20.661 below outlet pipe obv 20.675 Set Kp to 1		1.00	0.276	0.06	0.008	0.085	2.33	20.675 20.045	20.385 20.213	20.661		20.661	21.543	2/5
10 100	3/5	3/5 to 4/5	3A/5;3B/5;3C/5;1/5;2/5														31			5.51 5.51	196 265	0.471 0.554	408			237 (Pipe flow= Sum upstr atten flows)	57.485	4.44	450(2)	1.49 (3.77)	0.64		Qa 0.237 Da 450 Flow 3C/5 made eqv grate flow Angle 44 Chart 39 S/Do 2.5 chart Du/Do 0.83 K0 1.90 K0.5 1.79 Qu/Do 0.18 Cg 1.29 K 1.76 S/Do 2.0 K0 2.11 K0.5 1.90 K 1.84 S/Do 1.5 K0 2.51 K0.5 2.19 K 2.09 Interp val for S/Do 1.52 Kw 2.08 CHART 38 S/Do 2.0 K0 2.18 K0.5 1.83 K 1.75 S/Do 1.5 K0 2.44 K0.5 2.09 K 1.98 Interp val for S/Do 1.52 Ku 1.97 K vals above for stepped pipes as grate flow grate flow decreased by 0.194 from 3C/5 Routine 2.13 Equiv defin 22 CHART 49 High vel lat 3C/5 Dhv 450 Qhv 0.194 Dhv/Div 1.2 Dhv/Do 1.00	0.113	1.88	0.213	Qhv/Qo 0.82 H 2.49 Low vel lat 2/5 Dlv 375 Qlv 0.043 Dlv/Do 0.83 Qlv/Qo 0.18 L 0.05 H-L 2.44 No grate flow: H-L-h2 = 2.24 KuxKw= 2.24 Combined pipes in line case Join Pipes: 2/5 and 3C/5 Vel 1.129 Vel2 0.387 Ec Dia 530 Angle 231 Flow 0.237 CHART 50 Du/Do1.18 alpha 0 Kw 0.05 Vu 1.97 WSE 0.09 Ku 0.77 Kw 0.80 Interpolated Kuu 1.89 Kwu 1.89 K vals step pipes as pipe flow Ku 1.88 Kw 1.89 Averaged Ku 1.88 Kw 1.99		1.90	0.215	0.69	0.397	0.196	3.55	20.000 17.450	20.000 17.446	20.213		20.215	21.138	3/5
10 100	1/6	1/6 to 2/6	1/6			5.00 5.00	202 272		0.85 1.00	0.310 0.310	0.263 0.310	0.263 0.310	148 234 FLOW WIDTH/DEPTH 0.316Dp m	148	1.00	294.5	265.3	148	0		5.00 5.00	202 272	0.263 0.310	234			148 (Pipe flow= Grate flow)	4.450	1.80	450(2)	0.93 (2.40)	0.07		Qg 0.148 Qa 0.148 Da 450.000 CHRT 32: Vo2/2gDa 0.10 H/Do Kg side flow 6.62 end flow 5.13	0.044	6.62	0.292			6.62	0.292	0.27	0.012			17.230 17.150	17.417 17.405	17.769		17.769	18.294	1/6
10 100	2/6	2/6 to 3/6	1/6;2/6			5.00 5.00	202 272		0.85 1.00	0.004 0.004	0.003 0.004	0.003 0.004	2 3 FLOW WIDTH/DEPTH 0.033Dp m	2	1.00	280	105.14	2	0		5.07 5.07	202 271	0.266 0.314	236			150 (Pipe flow= Sum upstr atten flows)	11.008	1.36	450(2)	0.94 (2.09)	0.18		Qg 0.002 Qa 0.150 Da 450.000 CHART 34 Angle 17 Case 3 S/Do 2.5 Du/Do 1.00 Qg/Do 0.01 K 0.32 S/Do 1.68 cor 6.01 Ku 0.33 Kw 0.33	0.045	0.33	0.014			0.33	0.014	0.28	0.031			17.100 16.950	17.391 17.360	17.405		17.405	17.938	2/6
10 100	3/6	3/6 to 5/5	1/6;2/6;3/6			5.00 5.00	202 272		0.85 1.00	0.165 0.165	0.140 0.165	0.140 0.165	79 125 FLOW WIDTH/DEPTH 2.197Dp m	96	1.00	280	105.14	96	0		5.25 5.25	199 269	0.406 0.479	358			242 (Pipe flow= Sum upstr atten flows)	19.334	0.55	450(2)	1.52 (1.32)	0.20		Qg 0.095 Qa 0.242 Da 450.000 Angle 81 Chart 47 S/Do 2.5 chart Du/Do 1.00 K0 1.92 K0.5 2.12 Qu/Do 0.61 Cg 0.84 K 2.09 S/Do 2.5 K0 1.92 K0.5 2.12 K 2.09 S/Do 2.0 K0 2.44 K0.5 2.40 K 2.41	0.118	1.88	0.221	Interp val for S/Do 2.14 Kw 2.32 CHART 46 S/Do 2.5 K0 1.82 K0.5 1.71 K 1.73 S/Do 2.0 K0 2.04 K0.5 1.92 K 1.94 Interp val for S/Do 2.14 Ku 1.84		2.32	0.273	0.72	0.133			16.900 16.800	17.139 17.006	17.360		17.412	17.575	3/6
10 100	1/12	1/12 to 2/12	1/12			5.00 5.00	202 272		0.85 1.00	1.080 1.080	0.918 1.080	0.918 1.080	515 816 FLOW WIDTH/DEPTH 0.727Dp m	515	3.50	2945	265.3	515	0		5.00 5.00	202 272	0.918 1.080	816			515 (Pipe flow= Grate flow)	6.732	3.71	525(2)	2.30 (3.87)	0.05			0.270	1.10	0.297			1.10	0.297	1.31	0.088			13.134 12.984	13.359 13.271	13.656		13.656	14.955	1/12
10 100	2/12	2/12 to 3/12	1/12;2/12			5.00 5.00	202 272		0.85 1.00	0.070 0.070	0.060 0.070	0.060 0.070	34 53 FLOW WIDTH/DEPTH 0.639Wd m	34	3.50	272	1	33	1		5.05 5.05	202 272	0.938 1.150	869			548 (Pipe flow= Sum upstr atten flows)	31.090	2.23	675(2)	1.49 (3.92)	0.12		Qg 0.057 Qa 0.869 Da 675.000 Angle 36 Chart 39 S/Do 2.5 chart Du/Do 0.78 K0 1.97 K0.5 1.76 Qu/Do 0.94 Cg 0.76 K 1.94 S/Do 2.0 K0 2.20 K0.5 1.85 K 2.15 S/Do 1.5 K0 2.59 K0.5 2.12 K 2.52	0.113	2.59	0.296	Interp val for S/Do 2.43 Kw 2.58 CHART 38 S/Do 2.0 K0 2.16 K0.5 1.82 K 2.10 S/Do 1.5 K0 2.54 K0.5 2.11 K 2.48 Interp val for S/Do 2.43 Ku 2.53		2.58	0.292	0.39	0.065	0.253	2.66	12.985 12.685	12.985 12.871	13.271		13.271	13.614	2/12
10 100	3/12	3/12 to 4/12	1/12;2/12;3/12			5.00 5.00	202 272		0.85 1.00	0.122 0.122	0.104 0.122	0.104 0.122	58 92 FLOW WIDTH/DEPTH 1.014Wd m	58	3.50	272	1	56	2		5.17 5.17	200 270	1.082 1.272	954			598 (Pipe flow= Sum upstr atten flows)	59.648	1.68	675(2)	1.62 (3.97)	0.61		Qg 0.055 Qa 0.598 Da 675.000 Angle 90 Chart 47 S/Do 2.5 chart Du/Do 1.00 K0 1.92 K0.5 2.12 Qu/Do 0.91 Cg 0.74 K 1.97 S/Do 2.0 K0 2.44 K0.5 2.40 K 2.43 S/Do 1.5 K0 2.67 K0.5 2.58 K 2.65	0.134	2.14	0.286	Interp val for S/Do 2.52 Kw 2.54 CHART 46 S/Do 2.0 K0 2.04 K0.5 1.92 K 2.01 S/Do 1.5 K0 2.09 K0.5 2.31 K 2.14 Interp val for S/Do 2.52 Ku 2.14		2.54	0.353	0.47	0.279	0.354	3.11	12.585 11.985	12.585 11.813	12.871		12.938	13.311	3/12
10 100	4/12	4/12 to 3/4	1/12;2/12;3/12;4/12			5.00 5.00	202 272		0.85 1.00	0.085 0.085	0.072 0.085	0.072 0.085	40 64 FLOW WIDTH/DEPTH 0.749Wd m	40	3.50	272	1	39	1	1B/3	5.18 5.18	194 261	1.154 1.357	984			618 (Pipe flow= Sum upstr atten flows)	18.560	0.81	675(2)	1.58 (2.13)	0.18		Qg 0.037 Qa 0.618 Da 675.000 CHART 33 Angle 0 S/Do 2.5 Du/Do 1.00 Qg/Do 0.06 K 0.39 S/Do 1.41 cor 0.07 Ku 0.46 Kw 0.46	0.144	0.46	0.066			0.46	0.066	0.50	0.093			11.535 11.385	11.747 11.654	11.813		11.813	12.231	4/12
10 100	4B/5	4B/5 to 4/5	4B/5			5.00 5.00	202 272		0.85 1.00	0.067 0.067	0.057 0.067	0.057 0.067	32 51 FLOW WIDTH/DEPTH 1.293Wd m DOWNSTREAM 0.973m	53	4.50	499	8	25	28	5C/5	5.00 5.00	202 272	0.057 0.067	51			25 (Pipe flow= Grate flow)	8.800	1.14	375(2)	0.23 (1.59)	0.15		Qg 0.025 Qa 0.025 Da 375.000 CHRT 32: Vo2/2gDa 0.01 H/Do Kg side flow 12.66 end flow 7.46 Part full downstream pipe	0.003	1.00	0.009	Upstream HGL 17.457 below outlet pipe obv 17.625 Set Kp to 1		1.00	0.009	0.02	0.002	0.092	1.17	17.625 17.525	17.448 17.446	17.457		17.457	18.593	4B/5

PLANS AND DOCUMENTS referred to in the PDA APPROVAL

23 DEC 2013

MEDC

Issue	Description	Author	Date
02	G.C.C.C. R.F.I.	BD	14/11/13
01	ISSUE FOR DPW APPROVAL	BD	14/10/13

Scale

10mm on Original

Surveyor: BENNETT + BENNETT
Property Consultants, Surveyors + Town Planners
All mail to: PO Box 5021 GCMC, Qld 9726
mail@bennettandbennett.com.au
ABN Pty. Ltd. A.C.N. 010 477 551
COOMERA OFFICE: 9 Jowett Street, Coomera, 4209, Ph (07) 5573 6177, Fax (07) 5529 4342

Architect: ARCHIPELAGO

Filename: C2310-C2317-AA005621-SWD CALC.DWG

Client: Queensland Government
DEPARTMENT OF STATE DEVELOPMENT, INFRASTRUCTURE & PLANNING

Status: FOR APPROVAL
NOT FOR CONSTRUCTION

Approved: REPQ No: 8677

Scales		Current Issue Signatures	
Original Size	A1	Author B.DAVEY	
Height Datum	AHD	Designer T.DINGLE	
Grid	MGA	Reviewer B.THOMPSON	

© Copyright reserved

Project: GOLD COAST PARKLANDS REDEVELOPMENT
TRUNK INFRASTRUCTURE

Title: STORMWATER CALCULATION TABLES - SHEET 1 OF 8

Hyder

HYDER CONSULTING PTY. LTD
ABN 76 104 485 289
P.O.Box 1653
Southport, QLD 4215
Australia
Tel: +61 (07) 5532 3933
Fax: +61 (07) 5591 4778
www.hyderconsulting.com

Drawing No.	Project No.	Issue
C2310	AA005621	02

14/Nov/2013 12:31 PM F:\AA005621\E-CAD\C-Civil\D-Final\C2310-C2317-AA005621-SWD CALC.dwg V1

LOCATION					TIME		SUB-CATCHMENT RUNOFF							INLET DESIGN							DRAIN DESIGN												HEADLOSSES									PART FULL		DESIGN LEVELS						
					tc	I	C10	C	A	C×A	+CA	Q					Qg	Qb		tc	I	+CA	Qt	Qm	Qs	Qp	L	S		V	T		V2/2g	Ku	hu	Kl	hl	Kw	hw	Sf	hf		Vp							
DESIGN ARI	STRUCTURE No.	DRAIN SECTION	SUB-CATCHMENTS CONTRIBUTING	LAND USE	SLOPE OF CATCHMENT	SUB-CATCHMENT TIME OF CONC.	RAINFALL INTENSITY	10yr RUNOFF CO-EFFICIENT	CO-EFFICIENT OF RUNOFF	SUB-CATCHMENT AREA	EQUIVALENT AREA	SUM OF (C x A)	SUB-CATCHMENT DISCHARGE	FLOW IN K&C (INC. BYPASS)	ROAD GRADE AT INLET	MINOR FLOW ROAD CAPACITY	INLET TYPE	FLOW INTO INLET	BYPASS FLOW	BYPASS STRUCTURE No.	CRITICAL TIME OF CONC.	RAINFALL INTENSITY	TOTAL (C x A)	MAJOR TOTAL FLOW	MAJOR SURFACE FLOW CAPACITY	MAJOR SURFACE FLOW	PIPE FLOW	REACH LENGTH	PIPE GRADE	PIPE / BOX DIMENSIONS (CLASS)	FLOW VELOCITY FULL (PIPE GRADE VELOCITY)	TIME OF FLOW IN REACH	STRUCTURE CHART No.	STRUCTURE RATIOS FOR 'K' VALUE CALCULATIONS	VELOCITY HEAD	U/S HEADLOSS COEFFICIENT	U/S PIPE STRUCT. HEADLOSS	LAT. HEADLOSS CO-EFFICIENT	LAT. PIPE STRUCT. HEADLOSS	W.S.E CO-EFFICIENT	CHANGE IN W.S.E	PIPE FRICTION SLOPE	PIPE FRICTION HEADLOSS (L x Sf)	DEPTH	VELOCITY	OBVERT LEVELS	DRAIN SECTION H.G.L	UPSTREAM H.G.L	LAT. H.G.L	W.S.E.	SURFACE OR K&C INVERT LEVEL	STRUCTURE No.
yrs					%	min	mm/h			ha	ha	ha	l/s	l/s	%	l/s		l/s	l/s	min	mm/h	ha	l/s	l/s	l/s	l/s	m	%	mm	m/s	min		m		m		m		%	m	m	m/s	m	m	m	m	m	m	
10 100	4/5	4/5 to 5/5	3A/5;3B/5;3C/5;1/5;2/5,4B/5;4/5			5.00 5.00	202 272		0.85 1.00	0.078 0.078	0.066 0.078	0.066 0.078	37 59 FLOW WIDTH/DEPTH 1.104Wd m DOWNSTREAM 0.770m	37	4.59	499	8	20	17	3/6	6.15 6.15	190 257	0.594 0.699	499			272 (Pipe flow= Sum upstr	15.284 atten flows)	4.58	525(2)	1.21 (4.30)	0.21		Qg 0.019 Qa 0.272 Do 525.000 Routine 2.1 CHART 48 Du/Do 0.86 Qu/Qa 0.84 K 0.11 d/Do 2.0 chrt Qg/Qa 0.07 Kg 0.05 d/Do 1.5 chrt Qg/Qa 0.07 Kg 0.05 d/Do 1.00 Interp value Kg 0.04 Ku+Kw= 0.16 Combined pipes in line case Join Pipes:	0.075	0.16	0.012	3/5 and 4B/5 Vel1 1.443 Vel2 0.213 Eq Dia 492 Angle 171 Flow 0.253 CHART 33 Angle 0 S/Do 2.5 Du/Do 0.94 Qg/Qa 0.07 K 0.30 S/Do 1.06 cor 0.12 Ku 0.42 Kw 0.42 Interpolated Ku= 0.16 Kw= 0.16		0.16	0.012	0.37	0.056	0.194	3.69	17.434 16.734	17.434 17.006	17.446		17.446	19.503	4/5
10 100	5/5	5/5 to 9A/5	1/6;2/6;3/6;3A/5;3B/5;3C/5;1/5;2/5;4B/5;4/5														31				6.39 6.39	188 254	1.000 1.178	831			498 (Pipe flow= Sum upstr	51.393 atten flows)	4.48	525(2)	2.22 (4.25)	0.39		Qa 0.498 Do 525 Flow 3/6 made eqv grate flow CHART 33 Angle 0 S/Do 2.5 Du/Do 1.00 Qg/Qa 0.46 K 1.44 S/Do 1.82 cor 0.30 Ku 1.74 Kw 1.74 K vals above for stepped pipes as grate flow grate flow decreased by 0.229 from 3/6 Routine 2.1 Combined pipes in line case Join Pipes:	0.251	1.28	0.322	4/5 and 3/6 Vel1 1.242 Vel2 1.440 Eq Dia 689 Angle 213 Flow 0.498 CHART 50 Du/Do 1.31 alpha 0 K'w 0.05 Vu 1.34 W5E 0.23 Ku 0.91 Kw 0.93 Interpolated Ku= 1.28 Kw= 1.29 K vals step pipes as pipe flow Ku 1.28 Kw 1.29 Averaged Ku 1.28 Kw 1.29		1.29	0.325	1.23	0.630	0.274	4.30	16.684 14.384	16.684 14.348	17.005		17.009	17.822	5/5
100 100	1/1	1/1 to 1A/1															31				30.00 30.00	147 147	0.000 31.102	12700			12700 Additional flow: 12.700 cumecs (Pipe flow= Sum upstr	92.155 atten flows)	0.60	2 / 3000 x 14.95 (RCBC)	1.41 (3.74)	1.09		Qa 12.700 Do 2827 CHRT 32: Vo2/2gDo 0.07 H/Do Kg side flow 8.73 end flow 6.51	0.101	8.73	0.885			8.73	0.885	0.08	0.078	0.618	3.42	10.399 9.849	10.399 10.288	11.284		11.284	11.600	1/1
100 100	1A/1	1A/1 to 2/1	1A/1			5.00 5.00	272 272		1.00 1.00	0.480 0.480	0.480 0.480	0.480 0.480	363 363 FLOW WIDTH/DEPTH 6.992Dp m	363	1.00	597	205.3	363	0		31.09 31.09	145 145	0.480 31.582	12721			12721 (Pipe flow= Sum upstr	85.498 atten flows)	0.68	2 / 3000 x 14.95 (RCBC)	1.41 (3.99)	1.01		Qg 0.194 Qa 12.721 Do 2827.000 Angle 74 Chart 43 S/Do 2.5 chart Du/Do 1.00 K0 1.35 K0.5 1.93 Du/Do 0.98 Cg 0.06 K 1.37 S/Do 2.0 K0 1.41 K0.5 2.25 K 1.44 S/Do 1.5 K0 1.58 K0.5 2.53 K 1.61	0.101	1.61	0.163	Interp val for S/Do 1.33 Kw 1.67 CHART 42 S/Do 2.0 K0 1.35 K0.5 2.10 K 1.38 S/Do 1.5 K0 1.53 K0.5 2.17 K 1.55 Interp val for S/Do 1.33 Ku 1.61		1.67	0.169	0.09	0.073			9.799 9.219	10.125 10.052	10.288		10.294	10.771	1A/1
100 100	2/1	2/1 to 2A/1	1A/1;2/1			5.00 5.00	272 272		1.00 1.00	1.554 1.554	1.554 1.554	1.554 1.554	1174 1174 FLOW WIDTH/DEPTH 10.000Dp m	1174	1.00	597	205.3	597	577		32.10 32.10	143 143	2.034 33.136	13162			12859 (Pipe flow= Sum upstr	14.461 atten flows)	0.66	2 / 3000 x 14.95 (RCBC)	1.43 (3.95)	0.17		Qg 0.314 Qa 12.859 Do 2827.000 CHART 33 Angle 0 S/Do 2.5 Du/Do 1.00 Qg/Qa 0.02 K 0.27 S/Do 1.56 cor 0.02 Ku 0.29 Kw 0.29	0.104	0.29	0.030			0.29	0.030	0.09	0.013			9.219 9.123	10.022 10.009	10.052		10.052	10.338	2/1
10 100	1A/4	1A/4 to 1/4	1A/4			5.00 5.00	202 272		0.85 1.00	0.580 0.580	0.493 0.580	0.493 0.580	277 438 FLOW WIDTH/DEPTH 0.481Dp m	277	1.00	2945	265.3	277	0		5.00 5.00	202 272	0.493 0.580	438			277 (Pipe flow= Grate flow)	16.791	0.89	525(2)	1.24 (1.90)	0.23		Qg 0.277 Do 0.277 Do 525.000 CHRT 32: Vo2/2gDo 0.15 H/Do Kg side flow 5.21 end flow 4.19	0.078	5.21	0.408			5.21	0.408	0.38	0.064			12.284 12.134	12.648 12.584	13.056		13.056	13.072	1A/4
10 100	1/4	1/4 to 2/4	1A/4;1/4			5.00 5.00	202 272		0.85 1.00	1.100 1.100	0.935 1.100	0.935 1.100	525 831 FLOW WIDTH/DEPTH 0.736Dp m	525	1.00	2945	265.3	525	0		5.23 5.23	200 269	1.428 1.680	1255			794 (Pipe flow= Sum upstr	5.499 atten flows)	3.64	600(2)	2.72 (4.18)	0.03		Qg 0.520 Do 0.794 Do 600.000 Flow 1A/4 made eqv grate flow CHRT 32: Vo2/2gDo 0.62 H/Do Kg side flow 3.46 end flow 3.13 K vals above for stepped pipes as grate flow grate flow decreased by 0.274 from 1A/4 Angle 90 Chart 47 S/Do 2.5 chart Du/Do 0.88 K0 2.01 K0.5 2.27 Qu/Qa 0.35 Cg 1.17 K 2.31	0.377	2.00	0.754	S/Do 2.5 K0 2.01 K0.5 2.27 K 2.31 S/Do 2.0 K0 2.47 K0.5 2.48 K 2.39 Interp val for S/Do 2.46 Kw 2.32 CHART 46 S/Do 2.5 K0 1.71 K0.5 1.96 K 2.00 S/Do 2.0 K0 2.00 K0.5 2.01 K 2.01 Interp val for S/Do 2.46 Ku 2.00 K vals step pipes as pipe flow Ku 2.00 Kw 2.32		2.32	0.875	1.53	0.084			11.810 11.610	11.830 11.746	12.584		12.705	12.955	1/4
10 100	2/4	2/4 to 3/4	1A/4;1/4;2/4			5.00 5.00	202 272		0.85 1.00	0.092 0.092	0.078 0.092	0.078 0.092	44 70 FLOW WIDTH/DEPTH 0.771Dp m	44	1.00	280	105.14	44	0		5.26 5.26	199 268	1.506 1.772	1319			833 (Pipe flow= Sum upstr	11.209 atten flows)	2.68	750(2)	1.83 (4.16)	0.10		Qg 0.043 Qa 0.833 Do 750.000 CHART 33 Angle 11 S/Do 2.5 Du/Do 0.80 Qg/Qa 0.05 K -0.50 S/Do 1.10 cor 0.09 Ku -0.41 Kw -0.41	0.171	0.20	0.034			0.20	0.034	0.52	0.058			11.562 11.262	11.712 11.654	11.746		11.746	12.422	2/4
10 100	8A/11	8A/11 to 8B/11	8A/11			5.00 5.00	202 272		0.85 1.00	1.010 1.010	0.850 1.000	0.850 1.000	477 756 FLOW WIDTH/DEPTH 0.691Dp m	477	1.00	2945	265.3	477	0		5.00 5.00	202 272	0.850 1.000	756			477 (Pipe flow= Grate flow)	3.980	3.77	600(2)	1.63 (4.26)	0.04		Qg 0.477 Qa 0.477 Do 600.000 CHRT 32: Vo2/2gDo 0.22 H/Do Kg side flow 5.66 end flow 4.68	0.135	5.66	0.766			5.66	0.766	0.55	0.022	0.262	3.98	9.210 9.060	9.210 9.120	9.976		9.976	10.238	8A/11
10 100	8B/11	8B/11 to 8C/11	8A/11,8B/11			5.00 5.00	202 272		0.85 1.00	0.110 0.110	0.094 0.110	0.094 0.110	53 83 FLOW WIDTH/DEPTH 1.005Dp m	53	1.00	280	105.14	53	0		5.04 5.04	202 272	0.944 1.110	839			530 (Pipe flow= Sum upstr	11.000 atten flows)	1.82	600(2)	1.81 (2.96)	0.10		Qg 0.053 Qa 0.530 Do 600.000 CHART 33 Angle 0 S/Do 2.5 Du/Do 1.00 Qg/Qa 0.10 K 0.51 S/Do 1.18 cor 0.15 Ku 0.66 Kw 0.66	0.167	0.66	0.110			0.66	0.110	0.69	0.075	0.345	3.11	9.010 8.810	9.010 8.849	9.120		9.120	9.995	8B/11
10 100	8C/11	8C/11 to 2A/1	8A/11,8B/11;8C/11			5.00 5.00	202 272		0.85 1.00	0.095 0.095	0.081 0.095	0.081 0.095	45 72 FLOW WIDTH/DEPTH 0.797Dp m	45	1.00	280	105.14	45	0		5.14 5.14	201 270	1.025 1.205	904			572 (Pipe flow= Sum upstr	17.436 atten flows)	0.57	750(2)	1.25 (1.93)	0.23		Qg 0.045 Qa 0.572 Do 750.000 Angle 104 Chart 47 S/Do 2.5 chart Du/Do 0.80 K0 2.14 K0.5 2.31 Qu/Qa 0.92 Cg 0.20 K 2.17 S/Do 2.0 K0 2.49 K0.5 2.40 K 2.47 S/Do 1.5 K0 2.71 K0.5 2.72 K 2.71 Interp val for: S/Do 1.29 Kw 2.81 CHART 46	0.080	1.00	0.121	S/Do 2.0 K0 1.93 K0.5 2.03 K 1.95 S/Do 1.5 K0 2.09 K0.5 2.31 K 2.14 Interp val for S/Do 1.29 Ku 2.21 Part full downstream pipe Upstream HGL 8.849 below outlet pipe obv 9.912 Set Kg to 1		1.00	0.121	0.24	0.042	0.448	2.05	8.912 8.812	8.728 8.686	8.849		8.849	9.692	8C/11
10 100	1/3	1/3 to 2/3	1/3			5.00 5.00	202 272		0.85 1.00	1.330 1.330	1.131 1.330	1.131 1.330	635 1005 FLOW WIDTH/DEPTH 0.802Dp m	635	1.00	2945	265.3	635	0		5.00 5.00	202 272	1.131 1.330	1005			635 (Pipe flow= Grate flow)	5.814	1.72	525(2)	2.84 (2.63)	0.03		Qg 0.635 Do 0.635 Do 525.000 CHRT 32: Vo2/2gDo 0.77 H/Do Kg side flow 3.10 end flow 2.84	0.411	3.10	1.274			3.10	1.274	1.99	0.116			13.134 13.034	13.190 13.074	14.464		14.464	14.103	1/3
10 100	2/3	2/3 to 3/3	1/3;2/3			5.00 5.00	202 272		0.85 1.00	0.073 0.073	0.062 0.073	0.062 0.073	35 55 FLOW WIDTH/DEPTH 1.105Wd m	35	1.00	145	1	35	0	4B/1	5.03 5.03	202 272	1.193 1.403	1060			670 (Pipe flow= Sum upstr	16.110 atten flows)	1.55	600(2)	2.29 (2.73)	0.12		Qg 0.035 Qa 0.670 Do 600.000 CHART 34 Angle 15 Case 3 S/Do 2.5 Du/Do 0.88 Qg/Qa 0.05 K 0.15 S/Do 1.10 cor 0.09 Ku 0.24 Kw 0.24	0.267	0.24	0.064			0.24	0.064	1.09	0.176	0.428	3.06	13.010 12.760	13.010 12.825	13.074		13.074	13.723	2/3
10 100	1/7	1/7 to 2/7	1/7			5.00 5.00	202 272		0.85 1.00	0.947 0.947	0.835 0.947	0.805 0.947	452 716 FLOW WIDTH/DEPTH 0.666Dp m	452	1.00	2945	265.3	452	0		5.00 5.00	202 272	0.805 0.947	716			452 (Pipe flow= Grate flow)	4.450	2.25	525(2)	2.02 (3.01)	0.04		Qg 0.452 Qa 0.452 Do 525.000 CHRT 32: Vo2/2gDo 0.39 H/Do Kg side flow 4.31 end flow 3.70	0.208	4.31	0.896			4.31	0.896	1.01	0.045	0.320	3.23	11.834 11.734	11.834 11.737	12.730		12.730	12.959	1/7
10 100	2/7	2/7 to 3/7	1/7;2/7			5.00 5.00	202 272		0.85 1.00	0.004 0.004	0.003 0.004	0.003 0.004	2 3 FLOW WIDTH/DEPTH 0.033Dp m	2	1.00	280	105.14	2	0		5.04 5.04	202 272	0.808 0.951	719			454 (Pipe flow= Sum upstr	11.135 atten flows)	2.25	600(2)	1.55 (3.29)	0.12		Qg 0.002 Qa 0.454 Do 600.000 CHART 34 Angle 19 Case 3 S/Do 2.5 Du/Do 0.88 Qg/Qa 0.00 K -0.05 S/Do 1.00 cor 0.01 Ku -0.04 Kw -0.04	0.122	0.20	0.024			0.20	0.024	0.50	0.056			11.710 11.460	11.713 11.657	11.737		11.737	12.533	2/7

PLANS AND DOCUMENTS referred to in the PDA APPROVAL

23 DEC 2013

MEDQ

Issue	Description	Author	Date
01	ISSUE FOR DPW APPROVAL	BD	14/10/13

100mm on Original

Scale

Surveyor: BENNETT+BENNETT
Property Consultants, Surveyors + Town Planners
All mail to: PO Box 5021, GCMC, Qld 9726
mail@bennettandbennett.com.au
BBH Pty. Ltd. A.C.N. 010 427 520
COOMERA OFFICE: 9 Jewell Street, Coomera, 4209
Ph (07) 5573 6177
Fax (07) 5529 4242

Architect: ARCHIPELAGO

Filename: C2310-C2317-AA005621-SWD CALC.DWG

Client: Queensland Government
DEPARTMENT OF STATE DEVELOPMENT, INFRASTRUCTURE & PLANNING

Status: FOR APPROVAL
CONSTRUCTION SUBJECT TO COUNCIL APPROVAL

Approved: R.E.P.Q. No: 8677

Scales

Current Issue Signatures

Original Size	A1	Author B.DAVEY	
Height Datum	AHD	Designer T.DINGLE	
Grid	MGA	Reviewer B.THOMPSON	

© Copyright reserved

Project: GOLD COAST PARKLANDS REDEVELOPMENT
TRUNK INFRASTRUCTURE

Title: STORMWATER CALCULATION TABLES - SHEET 2 OF 8

Hyder

HYDER CONSULTING PTY. LTD
ABN 76 104 485 289
P O Box 1653
Southport, QLD 4215
Australia
Tel: +61 (07) 5532 3933
Fax: +61 (07) 5591 4778
www.hyderconsulting.com

Drawing No.	Project No.	Issue
C2311	AA005621	01

14/Oct/2013 1:36 PM \\hc-aus-gc-fs-01\jobs\AA005621\E-CAD\C-Civil\D-Final\C2310-C2317-AA005621-SWD CALC.dwg V1

LOCATION / TIME / SUB-CATCHMENT RUNOFF / INLET DESIGN

Design ARI (yrs)	Structure No.	Drain Section	Sub-Catchments Contributing	Land Use	Slope of Catchment (%)	tc Sub-Catchment Time of Conc. (min)	I Rainfall Intensity (mm/h)	C10 10yr Runoff Co-efficient	C Co-efficient of Runoff	A Sub-Catchment Area (ha)	C×A Equivalent Area (ha)	+CA Sum of (C × A) (ha)	Q Sub-Catchment Discharge (l/s)	Flow in K&C (Inc. Bypass) (l/s)	Road Grade at Inlet (%)	Minor Flow Road Capacity (l/s)	Inlet Type	Qg Flow into Inlet (l/s)	Qb Bypass Flow (l/s)	Bypass Structure No.
10 100	3/7	3/7 to 7/5	1/7;2/7;3/7			5.00 5.00	202 272		0.85 1.00	0.258 0.258	0.219 0.258	0.219 0.258	123 195 FLOW WIDTH/DEPTH 3.107Dp m	142	1.00	280	10S.14	142	0	
10 100	5C/5	5C/5 to 5A/5	5C/5			5.00 5.00	202 272		0.85 1.00	0.057 0.057	0.048 0.057	0.048 0.057	27 43 FLOW WIDTH/DEPTH 1.314Wd m DOWNSTREAM 0.989m	55	4.50	499	8	26	29	6C/5
10 100	5A/5	5A/5 to 6/5	1/6 to 4/5;5C/5;5A/5	02		5.00 5.00	202 272		0.85 1.00	0.059 0.059	0.050 0.059	0.050 0.059	28 45 FLOW WIDTH/DEPTH 0.973Wd m DOWNSTREAM 0.920m	28	4.50	499	8	17	11	6/5
10 100	6/11	6/11 to 7/11															31			
10 100	7A/11	7A/11 to 7/11	7A/11			5.00 5.00	202 272		0.85 1.00	0.130 0.130	0.111 0.130	0.111 0.130	62 98 FLOW WIDTH/DEPTH 1.064Wd m	62	3.50	272	1	60	2	
10 100	7/11	7/11 to 2A/1	7A/11														31			
100 100	2A/1	2A/1 to 3/1	1A/1;2/1,8A/11;8B/11;8C/11;7A/11														31			
10 100	1/13	1/13 to 3/4	1/13			5.00 5.00	202 272		0.85 1.00	0.103 0.103	0.088 0.103	0.088 0.103	49 78 FLOW WIDTH/DEPTH 0.890Wd m	49	3.50	272	1	47	2	5B/4
10 100	3/4	3/4 to 4/4	1/12 to 2/4;1/13														31			
10 100	4/4	4/4 to 5/4	1/12 to 2/4;1/13														31			
10 100	1/2	1/2 to 3/2	1/2			5.00 5.00	202 272		0.85 1.00	0.437 0.437	0.371 0.437	0.371 0.437	208 330 FLOW WIDTH/DEPTH 0.397Dp m	208	1.00	2945	265.3	208	0	
10 100	3/2	3/2 to 4/2	1/2;3/2			5.00 5.00	202 272		0.85 1.00	0.074 0.074	0.063 0.074	0.063 0.074	35 56 FLOW WIDTH/DEPTH 0.441Wd m	35	7.00	384	1	34	1	4B/2
10 100	3A/3	3A/3 to 3/3	3A/3			5.00 5.00	202 272		0.85 1.00	0.063 0.063	0.054 0.063	0.054 0.063	30 48 FLOW WIDTH/DEPTH 0.742Wd m	30	2.00	205	1	30	0	4B/3
10 100	3/3	3/3 to 4/3	1/3;2/3;3A/3														31			
10 100	4A/1	4A/1 to 4B/1	4A/1			5.00 5.00	202 272		0.85 1.00	0.881 0.881	0.749 0.881	0.749 0.881	420 665 FLOW WIDTH/DEPTH 0.634Dp m	420	1.00	2945	265.3	420	0	

DRAIN DESIGN

Structure No.	tc Critical Time of Conc. (min)	I Rainfall Intensity (mm/h)	+CA Total (C × A) (ha)	Qt Major Total Flow (l/s)	Qm Major Surface Flow Capacity (l/s)	Qs Major Surface Flow (l/s)	Qp Pipe Flow (l/s)	L Reach Length (m)	S Pipe Grade (%)	Pipe / Box Dimensions (Class) (mm)	V Flow Velocity Full (Pipe Grade Velocity) (m/s)	T Time of Flow in Reach (min)	Structure Chart No.	Structure Ratios / For 'K' Value / Calculations
3/7	5.16 5.16	200 270	1.027 1.209	907			590 (Pipe flow= Sum upstr atten flows)	17.919	0.56	750(2)	1.29 (1.90)	0.23		Qg 0.141 Qo 0.590 Do 750.000 Angle 79 Chart 47 S/Do 2.5 chart Du/Do 0.80 K0 2.14 K0.5 2.31 Qu/Qo 0.76 Cg 0.56 K 2.23 S/Do 2.0 K0 2.49 K0.5 2.40 K 2.44 S/Do 1.5 K0 2.71 K0.5 2.72 K 2.71
5C/5	5.00 5.00	202 272	0.048 0.057	43			26 (Pipe flow= Grate flow)	8.800	0.91	375(2)	0.24 (1.51)	0.15		Qg 0.026 Qo 0.026 Do 375.000 CHRT 32: Vo2/2gDo 0.01 H/Do Kg side flow 10.64 end flow 7.45 Part full downstream pipe
5A/5	6.75 6.75	184 250	1.098 1.294	899			526 (Pipe flow= Sum upstr atten flows)	52.310	4.59	600(2)	1.80 (4.70)	0.48		Qg 0.015 Qo 0.526 Do 600.000 Flow 5C/5 made eqv grate flow CHART 33 Angle 0 S/Do 2.5
6/11	5.00 5.00	202 272	0.000 1.271	960			960 Additional flow: 0.960 cumecs (Pipe flow= Sum upstr atten flows)	52.086	2.88	750(2)	2.11 (4.32)	0.41		
7A/11	5.00 5.00	202 272	0.111 0.130	98			60 (Pipe flow= Grate flow)	2.500	0.87	375(2)	0.54 (1.48)	0.04		Qg 0.060 Qo 0.060 Do 375.000 CHRT 32: Vo2/2gDo 0.04 H/Do Kg side flow 7.27 end flow 5.31
7/11	5.41 5.41	198 266	0.111 1.401	1035			1000 (Pipe flow= Sum upstr atten flows)	14.365	1.04	750(2)	2.19 (2.60)	0.11		Qo 1.000 Do 750 Routine 2.13 Equiv defln 67 CHART 49 High vel lat 6/11 Dhv 750 Qhv 0.941 Dhv/Dlv 2.0 Dhv/Do 1.00 Qhv/Qo 0.94 H 2.96 Low vel latrl 7A/11 Dlv 375 Qlv 0.059 Dlv/Do 0.50 Qlv/Qo 0.06 L -0.15 H-L 3.11 No grate flow: H-L-0.2 = 2.91
2A/1	32.27 32.27	142 142	3.369 38.277	15098			14793 Additional flow: 1.000 cumecs (Pipe flow= Sum upstr atten flows)	72.946	0.20	2 / 3300 x 1495 (RCBC)	1.50 (2.21)	0.81		
1/13	5.00 5.00	202 272	0.088 0.103	78			47 (Pipe flow= Grate flow)	17.736	0.85	375(2)	0.43 (1.46)	0.30		Qg 0.047 Qo 0.047 Do 375.000 CHRT 32: Vo2/2gDo 0.03 H/Do Kg side flow 7.07 end flow 5.12
3/4	5.96 5.96	192 259	2.748 3.232	2325			1460 (Pipe flow= Sum upstr atten flows)	18.305	3.00	900(2)	2.22 (4.98)	0.14		Qo 1.460 Do 900 Flow 1/13 made eqv grate flow Routine 2.1 CHART 48 Du/Do 0.83 Qu/Qo 0.55 K 1.12 d/Do 2.0 chrt Qg/Qo 0.03 Kg 0.02 d/Do 1.5 chrt Qg/Qo 0.03 Kg 0.02 d/Do 1.00 Interp value Kg 0.02 Ku=Kw= 1.14 Combined pipes in line case Join Pipes:
4/4	6.10 6.10	190 257	2.748 3.232	2307			1460 (Pipe flow= Sum upstr atten flows)	37.466	2.80	900(2)	2.22 (4.81)	0.28		Qo 1.460 Do 900 CHART 50 Du/Do1.00 alpha 44 K'w 0.25 Vu 2.29 WSE 0.34 Ku 1.09 Kw 1.36
1/2	5.00 5.00	202 272	0.371 0.437	330			208 (Pipe flow= Grate flow)	5.611	3.56	450(2)	1.31 (3.38)	0.07		Qg 0.208 Qo 0.208 Do 450.000 CHRT 32: Vo2/2gDo 0.19 H/Do Kg side flow 6.10 end flow 4.94
3/2	5.07 5.07	202 271	0.434 0.511	385			242 (Pipe flow= Sum upstr atten flows)	40.087	4.74	450(2)	1.52 (3.90)	0.44		Qg 0.034 Qo 0.242 Do 450.000 Flow 1/2 made eqv grate flow CHRT 32: Vo2/2gDo 0.26 H/Do Kg side flow 5.22 end flow 4.37 K vals above for stepped pipes as grate flow grate flow decreased by 0.208 from 1/2 Angle 76 Chart 45 S/Do 2.5 chart Du/Do 1.00 K0 2.16 K0.5 1.81 Qu/Qo 0.86 Cg 0.35 K 2.04
3A/3	5.00 5.00	202 272	0.054 0.063	48			30 (Pipe flow= Grate flow)	10.923	3.20	375(2)	0.27 (2.84)	0.18		Qg 0.030 Qo 0.030 Do 375.000 CHRT 32: Vo2/2gDo 0.01 H/Do Kg side flow 10.58 end flow 7.42 Part full downstream pipe
3/3	5.18 5.18	200 270	1.247 1.466	1100			693 (Pipe flow= Sum upstr atten flows)	58.296	3.60	600(2)	2.37 (4.16)	0.41		Qo 0.693 Do 600 Flow 3A/3 made eqv grate flow CHART 33 Angle 5 S/Do 2.5
4A/1	5.00 5.00	202 272	0.749 0.881	666			420 (Pipe flow= Grate flow)	7.815	2.56	525(2)	1.88 (3.21)	0.07		

HEADLOSSES / PART FULL / DESIGN LEVELS

Structure No.	V2/2g Velocity Head (m)	Ku U/S Headloss Coefficient	hu U/S Pipe Struct. Headloss (m)	Kl Lat. Headloss Co-efficient	hl Lat. Pipe Struct. Headloss (m)	Kw W.S.E Co-efficient	hw Change in W.S.E (m)	Sf Pipe Friction Slope (%)	hf Pipe Friction Headloss (L × Sf) (m)	Depth (m)	Vp Velocity (m/s)	Obvert Levels (m)	Drain Section H.G.L (m)	Upstream H.G.L (m)	Lat. H.G.L (m)	W.S.E. (m)	Surface or K&C Invert Level (m)	Structure No.
3/7	0.085	2.30	0.195	Interp val for S/Do 1.31 Kw 2.81 CHART 46 S/Do 2.0 K0 1.93 K0.5 2.03 K 1.99 S/Do 1.5 K0 2.09 K0.5 2.31 K 2.21 Interp val for S/Do 1.31 Ku 2.30		2.81	0.238	0.26	0.046	0.461	2.04	11.462 11.362	11.462 11.398	11.657		11.700	12.177	3/7
5C/5	0.003	1.00	0.061	Upstream HGL 14.511 below outlet pipe obv 14.725 Set Kp to 1		1.00	0.061	0.02	0.002	0.100	1.10	14.725 14.645	14.450 14.370	14.511		14.511	15.469	5C/5
5A/5	0.165	0.23	0.038	Du/Do 0.88 Qg/Qo 0.07 K 0.10 S/Do 1.06 cor 0.13 Ku 0.23 Kw 0.23 K vals above for stepped pipes as grate flow		0.23	0.038	0.67	0.353	0.262	4.39	14.310 11.910	14.310 11.877	14.348		14.348	15.469	5A/5
6/11	0.227	1.10	0.250			1.10	0.250	0.68	0.356	0.375	4.29	10.762 9.262	10.762 9.307	11.012		11.012	11.665	6/11
7A/11	0.015	7.27	0.108			7.27	0.108	0.12	0.003			9.245 9.225	9.483 9.483	9.594		9.594	10.092	7A/11
7/11	0.244	1.11	0.271	Ku=Kw= 2.91 Combined pipes in line case Join Pipes: 6/11 and 7A/11 Vel1 2.130 Vel2 0.532 Eq Dia 790 Angle 161 Flow 1.000 CHART 50 Du/Do1.05 alpha 0 K'w 0.05 Vu 2.04 WSE 0.13 Ku 0.49 Kw 0.53 Interpolated Ku= 1.11 Kw= 1.14		1.14	0.279	0.74	0.107	0.536	2.92	9.212 9.062	9.212 8.848	9.483		9.491	10.164	7/11
2A/1	0.115	1.00	0.114			1.00	0.114	0.09	0.067			9.103 8.957	9.895 9.828	10.009		10.009	10.227	2A/1
1/13	0.009	7.07	0.066			7.07	0.066	0.07	0.013			11.375 11.225	11.667 11.654	11.733		11.733	12.203	1/13
3/4	0.251	1.15	0.289	2/4 and 4/12 Vel1 1.820 Vel2 1.708 Eq Dia 1008 Angle 213 Flow 1.415 CHART 33 Angle 0 S/Do 2.5 Du/Do 1.12 Qg/Qo 0.03 K 0.32 S/Do 1.10 cor 0.05 Ku 0.37 Kw 0.37 Interpolated Ku= 1.15 Kw= 1.15 K vals above for stepped pipes as grate flow		1.15	0.289	0.60	0.109	0.428	4.84	11.365 10.815	11.365 11.039	11.654		11.654	12.148	3/4
4/4	0.251	1.09	0.274			1.36	0.341	0.60	0.223	0.437	4.72	10.765 9.715	10.765 9.397	11.039		11.106	11.514	4/4
1/2	0.087	6.10	0.534			6.10	0.534	0.53	0.030	0.194	3.17	11.650 11.450	11.650 11.547	12.184		12.184	12.802	1/2
3/2	0.118	2.10	0.247	S/Do 2.0 K0 2.47 K0.5 2.34 K 2.43 S/Do 1.5 K0 2.74 K0.5 2.80 K 2.77 Interp val for S/Do 1.69 Kw 2.64 CHART 44 S/Do 2.0 K0 1.99 K0.5 2.11 K 2.03 S/Do 1.5 K0 2.12 K0.5 2.17 K 2.14 Interp val for S/Do 1.69 Ku 2.10 K vals step pipes as pipe flow Ku 2.10 Kw 2.64		2.64	0.311	0.72	0.289	0.195	3.66	11.300 9.400	11.300 9.728	11.547		11.611	12.383	3/2
3A/3	0.004	1.00	0.164	Upstream HGL 13.342 below outlet pipe obv 13.475 Set Kp to 1		1.00	0.164	0.03	0.003	0.078	1.79	13.475 13.125	13.178 12.828	13.342		13.342	14.129	3A/3
3/3	0.286	0.40	0.115	Du/Do 1.00 Qg/Qo 0.04 K 0.33 S/Do 1.19 cor 0.07 Ku 0.40 Kw 0.40 K vals above for stepped pipes as grate flow		0.40	0.115	1.17	0.681	0.330	4.30	12.710 10.610	12.710 10.555	12.825		12.825	13.793	3/3
4A/1	0.180	1.10	0.198			1.10	0.198	0.87	0.068			9.034 8.834	9.225 9.157	9.423		9.423	10.213	4A/1

PLANS AND DOCUMENTS
referred to in the PDA APPROVAL
23 DEC 2013
MEDQ

Issue	Description	Author	Date
02	G.C.C.C. R.F.I.	BD	14/11/13
01	ISSUE FOR OPW APPROVAL	BD	14/10/13

100mm on Original

Scale

Surveyor
BENNETT+BENNETT
Property Consultants, Surveyors + Town Planners
All mail to: PO Box 6021, GCMC., Qld 9726
mail@bennettandbennett.com.au
BBH Pty Ltd A.C.N. 010 427 531
COOMERA OFFICE
5 Jewell Street, Coomera 4209
Ph (07) 5573 6177
Fax (07) 5529 4342

Architect
ARCHIPELAGO

Filename: C2310-C2317-AA005621-SWD CALC.DWG

Client
Queensland Government
DEPARTMENT OF STATE DEVELOPMENT, INFRASTRUCTURE & PLANNING

Status
FOR APPROVAL
NOT FOR CONSTRUCTION

Approved [signature] R.E.P.Q No: 8677

Scales
Current Issue Signatures
Author B.DAVEY
Original Size A1 — Designer T.DINGLE
Height Datum AHD — Reviewer B.THOMPSON
Grid MGA — © Copyright reserved

Project
GOLD COAST PARKLANDS REDEVELOPMENT
TRUNK INFRASTRUCTURE

Title
STORMWATER CALCULATION TABLES - SHEET 3 OF 8

Hyder
HYDER CONSULTING PTY. LTD
ABN 76 104 485 289
P O Box 1653
Southport, QLD 4215
Australia
Tel: +61 (07) 5532 3933
Fax: +61 (07) 5591 4778
www.hyderconsulting.com

Drawing No. C2312 — Project No. AA005621 — Issue 02

LOCATION					TIME		SUB-CATCHMENT RUNOFF						INLET DESIGN							DRAIN DESIGN														HEADLOSSES									PART FULL		DESIGN LEVELS						
					tc	I	C10	C	A	C×A	+CA	Q					Qg	Qb		tc	I	+CA	Qf	Qm	Qs	Qp	L	S		V	T			V2/2g	Ku	hu	Kl	hl	Kw	hw	Sf	hf		Vp							
DESIGN ARI	STRUCTURE No.	DRAIN SECTION	SUB-CATCHMENTS CONTRIBUTING	LAND USE	SLOPE OF CATCHMENT	SUB-CATCHMENT TIME OF CONC.	RAINFALL INTENSITY	10yr RUNOFF CO-EFFICIENT	CO-EFFICIENT OF RUNOFF	SUB-CATCHMENT AREA	EQUIVALENT AREA	SUM OF (C x A)	SUB-CATCHMENT DISCHARGE	FLOW IN K&C (INC. BYPASS)	ROAD GRADE AT INLET	MINOR FLOW ROAD CAPACITY	INLET TYPE	FLOW INTO INLET	BYPASS FLOW	BYPASS STRUCTURE No.	CRITICAL TIME OF CONC.	RAINFALL INTENSITY	TOTAL (C x A)	MAJOR TOTAL FLOW	MAJOR SURFACE FLOW CAPACITY	MAJOR SURFACE FLOW	PIPE FLOW	REACH LENGTH	PIPE GRADE	PIPE / BOX DIMENSIONS (CLASS)	FLOW VELOCITY FULL (PIPE GRADE VELOCITY)	TIME OF FLOW IN REACH	STRUCTURE CHART No.	STRUCTURE RATIOS FOR 'K' VALUE CALCULATIONS	VELOCITY HEAD	U/S HEADLOSS COEFFICIENT	U/S PIPE STRUCT. HEADLOSS	LAT. HEADLOSS CO-EFFICIENT	LAT. PIPE STRUCT. HEADLOSS	W.S.E CO-EFFICIENT	CHANGE IN W.S.E	PIPE FRICTION SLOPE	PIPE FRICTION HEADLOSS (L x Sf)	DEPTH	VELOCITY	OBVERT LEVELS	DRAIN SECTION H.G.L	UPSTREAM H.G.L	LAT. H.G.L	W.S.E.	SURFACE OR K&C INVERT LEVEL	STRUCTURE No.
yrs					%	min	mm/h			ha	ha	ha	l/s	l/s	%	l/s		l/s	l/s	min	mm/h	ha	l/s	l/s	l/s	l/s	m	%	mm	m/s	min			m		m		m		m		m	m	m/s	m	m	m	m	m	m	
10 100	4B/1	4B/1 to 4C/1	4A/1;4B/1			5.00 5.00	202 272		0.85 1.00	0.173 0.173	0.147 0.173	0.147 0.173	82 130 FLOW WIDTH/DEPTH 1.759Dp m	82	1.00	280	105.14	82	0	5.07 5.07	202 271	0.896 1.054	193		(Pipe flow=	502 Sum upstr	11.400 atten flows)	0.88	600(2)	1.72 (2.06)	0.11		Qg 0.082 Qa 0.502 Do 600.000 CHART 33 Angle 4 S/Do 2.5 Du/Do 0.88 Qg/Qa 0.16 K 0.45 S/Do 1.57 cor 0.16 Ku 0.61 Kw 0.61	0.151	0.61	0.092			0.61	0.092	0.61	0.070			8.810 8.710	9.065 8.995	9.157		9.157	9.780	4B/1
10 100	4C/1	4C/1 to 4/1	4A/1;4B/1;4C/1			5.00 5.00	202 272		0.85 1.00	0.140 0.140	0.119 0.140	0.119 0.140	67 105 FLOW WIDTH/DEPTH 1.369Dp m	67	1.00	280	105.14	67	0	5.18 5.18	200 270	1.015 1.194	896		(Pipe flow=	563 Sum upstr	21.324 atten flows)	0.70	600(2)	1.93 (1.84)	0.18		Qg 0.066 Qa 0.563 Do 600.000 Angle 70 Chart 43 S/Do 2.5 chart Du/Do 1.00 K0 1.35 K0.5 1.93 Qu/Qa 0.88 Cg 0.29 K 1.52 S/Do 2.0 K0 1.41 K0.5 2.25 K 1.66 S/Do 1.5 K0 1.58 K0.5 2.53 K 1.86	0.190	1.69	0.320	Interp val for S/Do CHART 42 S/Do 2.0 K0 1.35 K0.5 S/Do 1.5 K0 1.53 K0.5 Interp val for S/Do		1.92 1.59 Kw 1.82 2.10 K 1.57 2.17 K 1.72 1.59 Ku 1.69	0.345	0.77	0.165			9.660 8.510	9.675 8.510	9.995		9.020	9.764	4C/1
10 100	4C/3	4C/3 to 4B/3	4C/3			5.00 5.00	202 272		0.85 1.00	0.400 0.400	0.340 0.400	0.340 0.400	191 302 FLOW WIDTH/DEPTH 0.374Dp m	191	1.00	2945	265.3	191	0	5.00 5.00	202 272	0.340 0.400	302		(Pipe flow=	191 Grate	9.044 flow)	4.42	450(2)	1.20 (3.77)	0.13		Qg 0.191 Qa 0.191 Do 450.000 CHRT 32: Vo2/2gDo 0.16 H/Do Kg side flow 6.70 end flow 5.32	0.073	6.70	0.492			6.70	0.492	0.45	0.041	0.174	3.35	11.200 10.800	11.200 10.867	11.692		11.692	11.974	4C/3
10 100	4B/3	4B/3 to 4/3	4C/3;4B/3			5.00 5.00	202 272		0.85 1.00	0.086 0.086	0.073 0.086	0.073 0.086	41 65 FLOW WIDTH/DEPTH 0.819Wd m	41	3.00	252	1	40	1	6A/3	5.13 5.13	201 270	0.413 0.486	365		(Pipe flow=	230 Sum upstr	2.114 atten flows)	0.95	450(2)	1.45 (1.74)	0.02		Qg 0.043 Qa 0.230 Do 450.000 CHART 34 Angle 13 Case 3 S/Do 2.5 Du/Do 1.00 Qg/Qa 0.17 K 0.84 S/Do 1.26 cor 0.25 Ku 1.09 Kw 1.09	0.107	1.09	0.117			1.09	0.117	0.65	0.014	0.313	1.95	10.750 10.730	10.750 10.593	10.867		10.867	11.456	4B/3
10 100	6C/5	6C/5 to 6/5	6C/5			5.00 5.00	202 272		0.85 1.00	0.060 0.060	0.051 0.060	0.051 0.060	29 45 FLOW WIDTH/DEPTH 1.345Wd m DOWNSTREAM 1.026m	58	4.50	499	8	27	31	8B/5	5.00 5.00	202 272	0.051 0.060	45		(Pipe flow=	27 Grate	8.801 flow)	1.14	375(2)	0.24 (1.69)	0.15		Qg 0.027 Qa 0.027 Do 375.000 CHRT 32: Vo2/2gDo 0.01 H/Do Kg side flow 10.64 end flow 7.45 Part full downstream pipe	0.003	1.00	0.014	Upstream HGL 11.893 pipe obv 12.075 Set Kp to 1		1.00 below outlet	0.014	0.02	0.002	0.097	1.21	12.075 11.975	11.879 11.877	11.893		11.893	13.088	6C/5
10 100	6/5	6/5 to 7/5	1/6 to 4/5;5C/5;5/A/5;6C/5;6/5			5.00 5.00	202 272		0.85 1.00	0.062 0.062	0.053 0.062	0.053 0.062	30 47 FLOW WIDTH/DEPTH 1.156Wd m DOWNSTREAM 0.812m	41	4.50	499	8	22	19	3/7	7.23 7.23	180 245	1.202 1.416	964		(Pipe flow=	559 Sum upstr	15.744 atten flows)	4.13	750(2)	1.23 (5.17)	0.21		Qg 0.020 Qa 0.559 Do 750.000 Flow 6C/5 made eqv grate flow CHART 33 Angle 0 S/Do 2.5	0.077	0.20	0.015			0.20 Du/Do 0.80 Qg/Qa 0.08 K -0.34 S/Do 0.98 cor 0.14 Ku -0.20 Kw -0.20 K vals above for stepped pipes as grate flow	0.015	0.23	0.036	0.252	4.23	11.862 11.212	11.862 11.398	11.877		11.877	13.088	6/5
10 100	7/5	7/5 to 7A/5	1/7;2/7;3/7;1/6 to 4/5;5C/5;5A/5;6C/5;6/5														31			7.44 7.44	119 243	2.229 2.625	1772		(Pipe flow=	1084 Sum upstr	72.543 atten flows)	3.82	825(2)	1.96 (5.30)	0.62		Qa 1.084 Do 825 Routine 2.2 Combined pipes in line case Join Pipes: 3/7 and 6/5 Vel1 1.258 Vel2 1.195	0.196	1.07	0.210			1.07 Eq Dia 1060 Angle 2.5 Flow 1.084 CHART 59 Du/Do1.28 alpha 0 Kv 0.05 Vu 1.23 WSE 0.19 Ku 0.89 Kw 0.91 Interpolated Ku= 1.07 Kw= 1.07	0.210	0.52	0.381	0.353	4.90	11.188 8.418	11.188 8.908	11.398		11.398	12.391	7/5
10 100	7A/5	7A/5 to 8/5	1/7;2/7;3/7;1/6 to 4/5;5C/5;5A/5;6C/5;6/5;7A/5			5.00 5.00	202 272		0.85 1.00	0.106 0.106	0.090 0.106	0.090 0.106	51 80 FLOW WIDTH/DEPTH 1.751Wd m DOWNSTREAM 1.247m	51	1.00	235	8	28	23		8.06 8.06	174 237	2.319 2.731	1798		(Pipe flow=	1084 Sum upstr	10.067 atten flows)	0.40	825(2)	1.96 (1.71)	0.09		Qg 0.024 Qa 1.084 Do 825.000 CHART 33 Angle 5 S/Do 2.5 Du/Do 1.00 Qg/Qa 0.02 K 0.27 S/Do 1.61 cor 0.02 Ku 0.29 Kw 0.29	0.196	0.29	0.057			0.29	0.057	0.52	0.053			8.398 8.358	8.851 8.798	8.908		8.908	9.189	7A/5
10 100	1/10	1/10 to 2/10	1/10			5.00 5.00	202 272		0.85 1.00	0.472 0.472	0.401 0.472	0.401 0.472	225 357 FLOW WIDTH/DEPTH 0.418Dp m	225	3.00	2945	265.3	225	0		5.00 5.00	202 272	0.401 0.472	357		(Pipe flow=	225 Grate	8.894 flow)	0.56	525(2)	1.00 (1.51)	0.15		Qg 0.225 Qa 0.225 Do 525.000 CHRT 32: Vo2/2gDo 0.10 H/Do Kg side flow 6.67 end flow 5.16	0.051	6.67	0.340			6.67	0.340	0.25	0.022			8.634 8.584	8.857 8.835	9.197		9.197	9.898	1/10
10 100	2A/10	2A/10 to 2/10	2A/10			5.00 5.00	202 272		0.85 1.00	0.167 0.167	0.142 0.167	0.142 0.167	80 126 FLOW WIDTH/DEPTH 1.330Wd m	80	3.00	252	1	78	2	3/10	5.00 5.00	202 272	0.142 0.167	126		(Pipe flow=	78 Grate	38.996 flow)	1.80	375(2)	0.71 (2.13)	0.65		Qg 0.078 Qa 0.078 Do 375.000 CHRT 32: Vo2/2gDo 0.07 H/Do Kg side flow 8.70 end flow 6.50 Part full downstream pipe	0.026	1.00	0.185	Upstream HGL 9.334 pipe obv 9.375 Set Kp to 1		1.00 below outlet	0.185	0.20	0.077	0.149	1.91	9.375 8.675	9.149 8.835	9.334		9.334	10.196	2A/10
10 100	2/10	2/10 to 3/10	1/10;2A/10;2/10			5.00 5.00	202 272		0.85 1.00	0.080 0.080	0.068 0.080	0.068 0.080	38 60 FLOW WIDTH/DEPTH 0.767Wd m DOWNSTREAM 0.233m	38	3.00	252	8	22	16	5D/9	5.65 5.65	195 263	0.611 0.719	525		(Pipe flow=	314 Sum upstr	35.434 atten flows)	0.85	525(2)	1.40 (1.85)	0.42		Qg 0.021 Qa 0.314 Do 525.000 Flow 2A/10 made eqv grate flow Angle 69 Chart 45 S/Do 2.5 chart Du/Do 1.00 K0 2.16 K0.5 1.81 Qu/Qa 0.69 Cg 0.69 K 1.92 S/Do 2.0 K0 2.47 K0.5 2.34 K 2.38 S/Do 1.5 K0 2.74 K0.5 2.89 K 2.79 Interp val for S/Do 1.74 Kw 2.59 CHART 44 S/Do 2.0 K0 1.99 K0.5 2.11 K 2.08 S/Do 1.5 K0 2.12 K0.5 2.17 K 2.15 Interp val for S/Do 1.74 Ku 2.12 K vals above for stepped pipes as grate flow grate flow decreased by 0.075 from 2A/10 Routine 2.13 Equiv defln 27 CHART 49 High vel (at 1/10 Dhv 525 Qhv 0.217 Dhv/Do 1.4 Dhv/Do 1.00	0.100	1.64	0.165	Qhv/Do 0.69 H 2.32 Low vel (at 2A/10 Dlv 375 Qlv 0.075 Dlv/Do 0.71 Qlv/Do 0.24 L 0.25 H-L 2.07 Ku=Kw= 2.07 Combined pipes in line case Join Pipes: 1/10 and 2A/10 Vel1 1.003 Vel2 0.682 Eq Dia 635 Angle 139 Flow 0.292 CHART 33 Angle 0 S/Do 2.5 Du/Do 1.21 Qg/Qa 0.07 K 0.42 S/Do 1.35 cor 0.09 Ku 0.51 Kw 0.51 Interpolated Ku= 1.60 Kw= 1.60 K vals step pipes as pipe flow Ku 1.60 Kw 1.60 Averaged Ku 1.64 Kw 1.68		1.68	0.168	0.49	0.172			8.534 8.234	8.670 8.498	8.835		8.838	9.480	2/10
10 100	3/10	3/10 to 6/9	1/10;2A/10;2/10;3/10			5.00 5.00	202 272		0.85 1.00	0.086 0.086	0.073 0.086	0.073 0.086	41 65 FLOW WIDTH/DEPTH 1.574Wd m DOWNSTREAM 0.742m	43	0.50	103	8	28	15	6A/9	6.07 6.07	191 258	0.684 0.805	577		(Pipe flow=	334 Sum upstr	65.177 atten flows)	0.54	600(2)	1.14 (1.61)	0.95		Qg 0.026 Qa 0.334 Do 600.000 CHART 34 Angle 23 Case 3 S/Do 2.5 Du/Do 0.89 Qg/Qa 0.08 K 0.26 S/Do 1.47 cor 0.09 Ku 0.35 Kw 0.35	0.066	0.35	0.023			0.35	0.023	0.27	0.177			8.210 7.860	8.475 8.298	8.498		8.498	9.286	3/10
10 100	3A/1	3A/1 to 3/1	3A/1			5.00 5.00	202 272		0.85 1.00	0.096 0.096	0.082 0.096	0.082 0.096	46 73 FLOW WIDTH/DEPTH 0.823Dp m	46	1.00	280	105.14	46	0		5.00 5.00	202 272	0.082 0.096	73		(Pipe flow=	46 Grate	8.215 flow)	0.85	375(2)	0.42 (1.46)	0.14		Qg 0.046 Qa 0.046 Do 375.000 CHRT 32: Vo2/2gDo 0.02 H/Do Kg side flow 10.14 end flow 7.20 Part full downstream pipe	0.009	1.00	0.051	Upstream HGL 8.634 pipe obv 8.795 Set Kp to 1		1.00 below outlet	0.051	0.07	0.006	0.136	1.26	8.795 8.725	8.583 8.577	8.634		8.634	9.610	3A/1
10 100	3B/1	3B/1 to 3/1	3B/1			5.00 5.00	202 272		0.85 1.00	0.203 0.203	0.173 0.203	0.173 0.203	97 154 FLOW WIDTH/DEPTH 2.177Dp m	99	1.00	280	105.14	99	0		5.00 5.00	202 272	0.173 0.203	153		(Pipe flow=	99 Grate	8.217 flow)	0.61	375(2)	0.90 (1.24)	0.14		Qg 0.099 Qa 0.099 Do 375.000 CHRT 32: Vo2/2gDo 0.11 H/Do Kg side flow 7.72 end flow 5.93 Part full downstream pipe	0.041	1.00	0.093	Upstream HGL 8.730 pipe obv 8.775 Set Kp to 1		1.00 below outlet	0.093	0.32	0.026	0.237	1.35	8.775 8.725	8.637 8.597	8.730		8.730	9.610	3B/1
100 100	3/1	3/1 to 4/1	1A/11 to 7A/11;3A/1;3B/1														31			33.08 33.08	141 141	3.668 38.576	15109		(Pipe flow=	1412 Sum upstr	23.452 atten flows)	0.19	2 / 3300 x 14.95	1.50 (RECT)(2.17)	0.26			0.115	1.20	0.137			1.20	0.137	0.09	0.022			8.937 8.892	9.691 9.659	9.828		9.828	9.881	3/1
10 100	4A/2	4A/2 to 4/2	4A/2			5.00 5.00	202 272		0.85 1.00	0.124 0.124	0.106 0.124	0.106 0.124	59 94 FLOW WIDTH/DEPTH 0.778Wd m	59	7.00	384	1	57	2	3B/1	5.00 5.00	202 272	0.106 0.124	94		(Pipe flow=	57 Grate	16.804 flow)	0.60	375(2)	0.52 (1.22)	0.28		Qg 0.057 Qa 0.057 Do 375.000 CHRT 32: Vo2/2gDo 0.04 H/Do Kg side flow 7.55 end flow 5.48	0.014	7.55	0.104			7.55	0.104	0.11	0.018			9.525 9.425	9.746 9.728	9.850		9.850	10.366	4A/2

PLANS AND DOCUMENTS referred to in the PDA APPROVAL
23 DEC 2013
MEDQ

Issue	Description	Author	Date
01	ISSUE FOR OPW APPROVAL	BD	14/10/13

100mm on Original

Scale

Surveyor: BENNETT + BENNETT
Property Consultants, Surveyors + Town Planners
All mail to: PO Box 5021, GCMC., Qld. 9726
mail@bennettandbennett.com.au
ABN Pty. Ltd. A.C.N. 010 427 501
COOMERA OFFICE: 9 Jowett Street, Coomera, 4209. Ph (07) 5573 6177 Fax (07) 5529 4342

Architect: ARCHIPELAGO

Filename: C2310-C2317-AA005621-SWD CALC.DWG

Client: Queensland Government
DEPARTMENT OF STATE DEVELOPMENT, INFRASTRUCTURE & PLANNING

Status: FOR APPROVAL
CONSTRUCTION SUBJECT TO COUNCIL APPROVAL
Approved: R.E.P.Q. No: 8677

Scales		Current Issue Signatures	
		Author B.DAVEY	
Original Size	A1	Designer T.DINGLE	
Height Datum	AHD	Reviewer B.THOMPSON	
Grid	MGA	© Copyright reserved	

Project: GOLD COAST PARKLANDS REDEVELOPMENT
TRUNK INFRASTRUCTURE

Title: STORMWATER CALCULATION TABLES - SHEET 4 OF 8

HYDER CONSULTING PTY. LTD
ABN 76 104 485 289
P O Box 1653
Southport, QLD 4215
Australia
Tel: +61 (07) 5532 3933
Fax: +61 (07) 5591 4778
www.hyderconsulting.com

Drawing No.	Project No.	Issue
C2313	AA005621	01

14/Oct/2013 1:36 PM \\hc-aus-gc-fs-01\Jobs\AA005621\E-CAD\C-Civil\D-Final\C2310-C2317-AA005621-SWD CALC.dwg V1

LOCATION					TIME		SUB-CATCHMENT RUNOFF						INLET DESIGN							DRAIN DESIGN														HEADLOSSES									PART FULL		DESIGN LEVELS						
DESIGN ARI	STRUCTURE No.	DRAIN SECTION	SUB-CATCHMENTS CONTRIBUTING	LAND USE	SLOPE OF CATCHMENT	SUB-CATCHMENT TIME OF CONC.	RAINFALL INTENSITY	10yr RUNOFF CO-EFFICIENT	CO-EFFICIENT OF RUNOFF	SUB-CATCHMENT AREA	EQUIVALENT AREA	SUM OF (C x A)	SUB-CATCHMENT DISCHARGE	FLOW IN K&C (INC. BYPASS)	ROAD GRADE AT INLET	MINOR FLOW ROAD CAPACITY	INLET TYPE	FLOW INTO INLET	BYPASS FLOW	BYPASS STRUCTURE No.	CRITICAL TIME OF CONC.	RAINFALL INTENSITY	TOTAL (C x A)	MAJOR TOTAL FLOW	MAJOR SURFACE FLOW CAPACITY	MAJOR SURFACE FLOW	PIPE FLOW	REACH LENGTH	PIPE GRADE	PIPE / BOX DIMENSIONS (CLASS)	FLOW VELOCITY FULL (PIPE GRADE VELOCITY)	TIME OF FLOW IN REACH	STRUCTURE CHART No.	STRUCTURE RATIOS FOR 'K' VALUE CALCULATIONS	VELOCITY HEAD	U/S HEADLOSS COEFFICIENT	U/S PIPE STRUCT. HEADLOSS	LAT. HEADLOSS CO-EFFICIENT	LAT. PIPE STRUCT. HEADLOSS	W.S.E CO-EFFICIENT	CHANGE IN W.S.E	PIPE FRICTION SLOPE	PIPE FRICTION HEADLOSS (L x Sf)	DEPTH	VELOCITY	OBVERT LEVELS	DRAIN SECTION H.G.L	UPSTREAM H.G.L	LAT. H.G.L	W.S.E.	SURFACE OR K&C INVERT LEVEL	STRUCTURE No.
																																			V2/2g	Ku	hu	Kl	hl	Kw	hw	Sf	hf		Vp								
yrs					%	min	mm/h			ha	ha	ha	l/s	l/s	%	l/s		l/s	l/s	min	mm/h	ha	l/s	l/s	l/s	l/s	m	%	mm	m/s	min			m		m		m		m	%	m	m	m/s	m	m	m	m	m	m	
10 100	4A/3	4A/3 to 4/3	4A/3			5.00 5.00	202 272		0.85 1.00	0.055 0.055	0.047 0.055	0.047 0.055	26 42 FLOW WIDTH/DEPTH 0.261Wd m DOWNSTREAM 0.035m	26	3.00	2995	1	25	1	6B/3	5.00 5.00	202 272	0.047 0.055	42			25 (Pipe flow= Grate flow)	9.025	0.78	375(2)	0.23 (1.40)	0.15		Qg 0.025 Qo 0.025 Do 375.000 CHRT 32: Vo2/2gDo 0.01 H/Do Kg side flow 10.68 end flow 7.46 Part full downstream pipe	0.003	1.00	0.008	Upstream HSL 10.565 below outlet pipe obv 10.725 Set Kp to 1		1.00	0.008	0.02	0.002	0.103	1.03	10.725 10.655	10.557 10.555	10.565		10.565	11.456	4A/3
10 100	4/3	4/3 to 6/3	1/3;2/3;3A/3;4C/3 ;4B/3;4A/3														31				5.59 5.59	196 264	1.107 2.007	1472			928 (Pipe flow= Sum upstr atten flows)	44.611	4.03	825(2)	1.68 (5.45)	0.44		Qo 0.928 Do 825 Flow 4A/3 made eqv grate flow Flow 4B/3 made eqv grate flow CHART 33 Angle 5 S/Do 2.5 Du/Do 0.73 Qg/Qo 0.27 K 0.11 S/Do 1.09 cor 0.44 Ku 0.55 Kw 0.55 K vals above for stepped pipes as grate flow grate flow discreased by 0.224 from 4B/3 Routine 2.1 CHART 48 Du/Do 0.73 Qu/Qo 0.73 K -0.02 d/Do 2.0 chrt Qg/Qo 0.03 Kg 0.01 d/Do 1.5 chrt Qg/Qo 0.03 Kg 0.01 d/Do 1.00 Interp value Kg 0.01	0.144	0.12	0.017	Ku=Kw= -0.01 Combined pipes in line case Join Pipes: 3/3 and 4B/3 Vel1 2.402 Vel2 1.409 Eq Dia 730 Angle 164 Flow 0.903 CHART 33 Angle 0 S/Do 2.5 Du/Do 0.88 Qg/Qo 0.03 K -0.09 S/Do 0.99 cor 0.05 Ku -0.04 Kw -0.04 Interpolated Ku= -0.02 Kw= -0.02 K vals step pipes as pipe flow Ku -0.02 Kw -0.02 Averaged Ku 0.12 Kw 0.12	0.12	0.017	0.38	0.172	0.320	4.80	10.538 8.738	10.538 8.802	10.555		10.555	11.515	4/3
10 100	4B/2	4B/2 to 4/2	4B/2			5.00 5.00	202 272		0.85 1.00	0.059 0.059	0.050 0.059	0.050 0.059	28 45 FLOW WIDTH/DEPTH 0.223Wd m DOWNSTREAM 0.023m	29	7.00	4575	1	28	1		5.00 5.00	202 272	0.050 0.059	45			28 (Pipe flow= Grate flow)	2.075	0.96	375(2)	0.25 (1.56)	0.03		Qg 0.028 Qo 0.028 Do 375.000 CHRT 32: Vo2/2gDo 0.01 H/Do Kg side flow 8.44 end flow 5.95	0.003	8.44	0.026			8.44	0.026	0.03	0.001			9.525 9.505	9.729 9.728	9.755		9.755	10.371	4B/2
10 100	4/2	4/2 to 4/1	1/2;3/2;4A/2;4B/2														31				5.51 5.51	196 265	0.590 0.694	511			317 (Pipe flow= Sum upstr atten flows)	30.990	0.65	450(2)	1.59 (1.44)	0.26		Qo 0.317 Do 450 Flow 4B/2 made eqv grate flow Routine 2.24 Join Pipes: 3/2 and 4A/2 Vel1 1.476 Vel2 0.501 Eq Dia 535 Angle 208 Flow 0.290 Angle 28 Chart 36 S/Do 2.5 chart Du/Do 1.19 K0 1.65 K0.5 1.93 Qu/Qo 0.91 Cg 0.22 K 1.71 S/Do 2.5 K0 1.65 K0.5 1.93 K 1.71 S/Do 2.0 K0 2.03 K0.5 2.15 K 2.16 Interp val for S/Do 2.26 Kw 1.89 CHART 35 S/Do 2.5 K0 1.36 K0.5 1.30 K 1.35 S/Do 2.0 K0 1.61 K0.5 1.80 K 1.65 Interp val for S/Do 2.26 Ku 1.49 K vals above for stepped pipes as grate flow grate flow decreased by 0.027 from 4B/2	0.202	0.96	0.194	Routine 3.1 Join Pipes: 4B/2 and 3/2 Vel1 0.245 Vel2 1.476 Eq Dia 497 Angle 183 Flow 0.262 Routine 2.1 Combined pipes in line case Join Pipes: Eqv 4B/2 & 3/2 and 4A/2 Vel1 1.358 Vel2 0.501 Eq Dia 579 Angle 208 Flow 0.317 CHART 58 Du/Du=1.29 alpha 0 K= 0.05 Vu 1.21 WSE 0.19 Ku 0.90 Kw 0.92 Interpolated Ku= 0.91 Kw= 0.91 K vals step pipes as pipe flow Ku 0.91 Kw 0.91 Averaged Ku 0.96 Kw 0.99	0.99	0.208	1.24	0.384			9.350 9.150	9.534 9.150	9.728		9.734	10.443	4/2
100 100	4/1	4/1 to 5/1	4A/1 to 3B/1;1/2;3 /2;4A/2;4B/2														31				33.34 33.34	14.0 14.0	5.556 42.727	16616			16315 Additional flow= 0.860 cumecs (Pipe flow= Sum upstr atten flows)	53.634	0.20	2 / 3300 x 14.95 (RCBC)(2.22)	1.65	0.54		Qo 16.315 Do 2934 Flow 4/2 made eqv grate flow Flow 4C/1 made eqv grate flow Angle 56 Chart 39 S/Do 2.5 chart Du/Do 1.00 K0 1.80 K0.5 1.91 Qu/Qo 0.90 Cg 0.12 K 1.81 S/Do 2.0 K0 1.98 K0.5 2.10 K 2.10 S/Do 1.5 K0 2.39 K0.5 2.52 K 2.40	0.139	2.00	0.277	Interp val for S/Do 1.56 Ku 2.00 K vals above for stepped pipes as grate flow		2.35	0.326	0.11	0.060			8.872 8.764	9.392 9.332	9.669		9.719	10.511	4/1
10 100	5A/4	5A/4 to 5B/4	5A/4			5.00 5.00	202 272		0.85 1.00	0.330 0.330	0.281 0.330	0.281 0.330	158 249 FLOW WIDTH/DEPTH 0.330Dp m	158	1.00	2945	265.3	158	0		5.00 5.00	202 272	0.281 0.330	249			158 (Pipe flow= Grate flow)	5.113	0.78	525(2)	0.71 (1.78)	0.09		Qg 0.158 Qo 0.158 Do 525.000 CHRT 32: Vo2/2gDo 0.05 H/Do Kg side flow 8.97 end flow 6.59	0.026	8.97	0.231			8.97	0.231	0.12	0.006			9.414 9.374	9.473 9.471	9.708		9.708	10.195	5A/4
10 100	5B/4	5B/4 to 5/4	5A/4;5B/4			5.00 5.00	202 272		0.85 1.00	0.134 0.134	0.114 0.134	0.114 0.134	64 101 FLOW WIDTH/DEPTH 1.246Wd m	66	2.50	230	1	65	1	1A/3	5.09 5.09	201 271	0.395 0.464	349			222 (Pipe flow= Sum upstr atten flows)	2.122	0.94	600(2)	0.76 (2.13)	0.04		Qg 0.065 Qo 0.222 Do 600.000 CHART 33 Angle 3 S/Do 2.5 Du/Do 0.88 Qg/Qo 0.29 K 0.90 S/Do 1.07 cor 0.50 Ku 1.40 Kw 1.40	0.029	1.40	0.041			1.40	0.041	0.12	0.003	0.251	1.95	9.430 9.410	9.430 9.397	9.471		9.471	10.401	5B/4
10 100	5/4	5/4 to 7/3	1/12 to 2/4,1/13;5 A/4,5B/4														31				6.38 6.38	188 254	3.143 3.696	2618			1652 (Pipe flow= Sum upstr atten flows)	114.593	0.54	1150(2)	1.85 (2.93)	1.03		Qo 1.652 Do 1050 Flow 4/4 made eqv grate flow Angle 69 Chart 45 S/Do 2.5 chart Du/Do 0.57 K0 3.29 K0.5 2.02 Qu/Qo 0.13 Cg 1.31 K 1.62 S/Do 2.0 K0 3.48 K0.5 2.49 K 2.18 S/Do 1.5 K0 3.74 K0.5 2.51 K 2.13 Interp val for S/Do 1.35 Kw 2.11 CHART 44 S/Do 2.0 K0 1.87 K0.5 2.02 K 2.07 S/Do 1.5 K0 2.12 K0.5 2.11 K 2.19 Interp val for S/Do 1.35 Ku 2.11 K vals above for stepped pipes as grate flow grate flow decreased by 1.445 from 4/4 Routine 2.2	0.174	0.38	0.066	CHART 53 Du/Do 0.9 Qu/Qo 0.87 Kw=Ku= -0.06 Combined pipes in line case Join Pipes: 5B/4 and 4/4 Vel1 2.271 Vel2 0.734 Eq Dia 1086 Angle 173 Flow 1.652 CHART 59 Du/Do=0.96 alpha 0 K= 0.05 Vu 2.08 WSE 0.93 Ku 0.10 Kw 0.16 Interpolated Ku= -0.02 Kw= 0.00 K vals step pipes as pipe flow Ku -0.02 Kw 0.00 Averaged Ku 0.38 Kw 0.40	0.40	0.069	0.34	0.387	0.717	2.59	9.331 8.716	9.331 8.743	9.397		9.400	10.472	5/4
10 100	5F/9	5F/9 to 5G/9	5F/9			5.00 5.00	202 272		0.85 1.00	0.456 0.456	0.388 0.456	0.388 0.456	218 345 FLOW WIDTH/DEPTH 0.410Dp m	218	1.00	2945	265.3	218	0		5.00 5.00	202 272	0.388 0.456	345			218 (Pipe flow= Grate flow)	5.909	1.69	525(2)	0.97 (2.61)	0.10		Qg 0.218 Qo 0.218 Do 525.000 CHRT 32: Vo2/2gDo 0.09 H/Do Kg side flow 7.16 end flow 5.50	0.048	7.16	0.343			7.16	0.343	0.23	0.014			8.334 8.234	8.496 8.482	8.839		8.839	9.453	5F/9
10 100	5G/9	5G/9 to 5/9	5F/9;5G/9			5.00 5.00	202 272		0.85 1.00	0.122 0.122	0.103 0.122	0.103 0.122	58 92 FLOW WIDTH/DEPTH 1.861Wd m	58	0.50	103	1	57	1		5.10 5.10	201 271	0.491 0.578	435			274 (Pipe flow= Sum upstr atten flows)	8.429	0.59	525(2)	1.22 (1.55)	0.12		Qg 0.057 Qo 0.274 Do 525.000 Angle 58 Chart 43 S/Do 2.5 chart Du/Do 1.00 K0 1.35 K0.5 1.93 Qu/Qo 0.79 Cg 0.49 K 1.63 S/Do 2.0 K0 1.41 K0.5 2.25 K 1.83 S/Do 1.5 K0 1.58 K0.5 2.53 K 2.05	0.076	1.83	0.139	Interp val for S/Do 1.58 Kw 2.01 CHART 42 S/Do 2.0 K0 1.35 K0.5 2.10 K 1.72 S/Do 1.5 K0 1.53 K0.5 2.17 K 1.85 Interp val for S/Do 1.58 Ku 1.83		2.01	0.153	0.37	0.031			8.184 8.134	8.343 8.312	8.482		8.496	8.935	5G/9
10 100	1/8	1/8 to 2/8	1/8			5.00 5.00	202 272		0.85 1.00	0.456 0.456	0.388 0.456	0.388 0.456	218 345 FLOW WIDTH/DEPTH 0.410Dp m	218	1.00	2945	265.3	218	0		5.00 5.00	202 272	0.388 0.456	345			218 (Pipe flow= Grate flow)	8.752	0.57	450(2)	1.37 (1.35)	0.11		Qg 0.218 Qo 0.218 Do 450.000 CHRT 32: Vo2/2gDo 0.21 H/Do Kg side flow 4.88 end flow 4.05	0.096	4.88	0.467			4.88	0.467	0.59	0.051			8.850 8.800	9.054 9.003	9.521		9.521	9.944	1/8
10 100	1C/3	1C/3 to 1B/3	1C/3			5.00 5.00	202 272		0.85 1.00	0.574 0.574	0.488 0.574	0.488 0.574	274 434 FLOW WIDTH/DEPTH 0.471Dp m	274	1.00	2945	265.3	274	0		5.00 5.00	202 272	0.488 0.574	434			274 (Pipe flow= Grate flow)	6.101	2.46	525(2)	1.22 (3.15)	0.08		Qg 0.274 Qo 0.274 Do 525.000 CHRT 32: Vo2/2gDo 0.14 H/Do Kg side flow 7.11 end flow 5.57	0.076	7.11	0.539			7.11	0.539	0.37	0.023	0.231	2.95	9.134 8.984	9.134 9.067	9.673		9.673	10.149	1C/3

PLANS AND DOCUMENTS
referred to in the PDA APPROVAL
23 DEC 2013
MEDQ

Issue	Description	Author	Date
01	ISSUE FOR OPW APPROVAL	BD	14/10/13

100mm on Original

Scale

Surveyor: BENNETT+BENNETT
Property Consultants, Surveyors + Town Planners
All mail to: PO Box 5021, GCMC, Qld. 9726
mail@bennettandbennett.com.au
ABN Pty. Ltd. A.C.N. 010 421 521
COOMERA OFFICE
9 Jowett Street,
Coomera. 4209
Ph (07) 5573 6177
Fax (07) 5529 4342

Architect: ARCHIPELAGO

Filename: C2310-C2317-AA005621-SWD CALC.DWG

Client: Queensland Government
DEPARTMENT OF STATE DEVELOPMENT, INFRASTRUCTURE & PLANNING

Status: FOR APPROVAL
CONSTRUCTION SUBJECT TO COUNCIL APPROVAL
Approved: R.E.P.Q. No: 8677
Scales
Original Size: A1
Height Datum: AHD
Grid: MGA
Current Issue Signatures
Author B.DAVEY
Designer T.DINGLE
Reviewer B.THOMPSON
© Copyright reserved

Project: GOLD COAST PARKLANDS REDEVELOPMENT
TRUNK INFRASTRUCTURE

Title: STORMWATER CALCULATION TABLES - SHEET 5 OF 8

Hyder
HYDER CONSULTING PTY. LTD
ABN 76 104 485 289
P O Box 1653
Southport, QLD 4215
Australia
Tel: +61 (07) 5532 3933
Fax: +61 (07) 5591 4778
www.hyderconsulting.com

Drawing No.	Project No.	Issue
C2314	AA005621	01

14/Oct/2013 1:36 PM \\hc-aus-gc-fs-01\jobs\AA005621\E-CAD\C-Civil\D-Final\C2310-C2317-AA005621-SWD CALC.dwg V1

LOCATION					TIME		SUB-CATCHMENT RUNOFF						INLET DESIGN							DRAIN DESIGN														HEADLOSSES									PART FULL		DESIGN LEVELS						
					tc	I	C10	C	A	C×A	+CA	Q					Qg	Qb		tc	I	+CA	Qt	Qm	Qs	Qp	L	S		V	T			V2/2g	Ku	hu	Kl	hl	Kw	hw	Sf	hf		Vp							
DESIGN ARI	STRUCTURE No.	DRAIN SECTION	SUB-CATCHMENTS CONTRIBUTING	LAND USE	SLOPE OF CATCHMENT	SUB-CATCHMENT TIME OF CONC.	RAINFALL INTENSITY	10yr RUNOFF CO-EFFICIENT	CO-EFFICIENT OF RUNOFF	SUB-CATCHMENT AREA	EQUIVALENT AREA	SUM OF (C x A)	SUB-CATCHMENT DISCHARGE	FLOW IN K&C (INC. BYPASS)	ROAD GRADE AT INLET	MINOR FLOW ROAD CAPACITY	INLET TYPE	FLOW INTO INLET	BYPASS FLOW	BYPASS STRUCTURE No.	CRITICAL TIME OF CONC.	RAINFALL INTENSITY	TOTAL (C x A)	MAJOR TOTAL FLOW	MAJOR SURFACE FLOW CAPACITY	MAJOR SURFACE FLOW	PIPE FLOW	REACH LENGTH	PIPE GRADE	PIPE / BOX DIMENSIONS (CLASS)	FLOW VELOCITY FULL (PIPE GRADE VELOCITY)	TIME OF FLOW IN REACH	STRUCTURE CHART No.	STRUCTURE RATIOS FOR "K" VALUE CALCULATIONS	VELOCITY HEAD	U/S HEADLOSS COEFFICIENT	U/S PIPE STRUCT. HEADLOSS	LAT. HEADLOSS CO-EFFICIENT	LAT. PIPE STRUCT. HEADLOSS	W.S.E CO-EFFICIENT	CHANGE IN W.S.E	PIPE FRICTION SLOPE	PIPE FRICTION HEADLOSS (L x Sf)	DEPTH	VELOCITY	OBVERT LEVELS	DRAIN SECTION H.G.L	UPSTREAM H.G.L	LAT. H.G.L	W.S.E.	SURFACE OR K&C INVERT LEVEL	STRUCTURE No.
yrs					%	min	mm/h			ha	ha	ha	l/s	l/s	%	l/s		l/s	l/s	min	mm/h	ha	l/s	l/s	l/s	l/s	m	%	mm	m/s	min			m		m		m		m	%	m	m	m/s	m	m	m	m	m	m	
10 100	18/3	18/3 to 7/3	1C/3;1B/3			5.00 5.00	202 272		0.85 1.00	0.097 0.097	0.082 0.097	0.082 0.097	46 73 FLOW WIDTH/DEPTH 1.655Wd m	47	0.50	103	1	47	0		5.08 5.08	201 271	0.570 0.671	595			319 (Pipe flow= Sum upstr | 11.560 atten flows)	2.60	525(2)	1.43 (3.23)	0.13		Qg 0.047 Qa 0.319 Do 525.000 CHART 37 Angle 48 Case 3 S/Do 2.5 Du/Do 1.00 Qg/Qa 0.15 K 1.07 S/Do 1.25 cor 0.21 Ku 1.28 Kw 1.28	0.104	1.28	0.133			1.28	0.133	0.50	0.058	0.248	3.13	8.934 8.634	8.934 8.743	9.067		9.067	9.740	18/3
10 100	2A/8	2A/8 to 2/8	2A/8			5.00 5.00	202 272		0.85 1.00	0.127 0.127	0.108 0.127	0.108 0.127	61 96 FLOW WIDTH/DEPTH 1.213Dp m	61	0.50	280	10S.14	61	0		5.00 5.00	202 272	0.108 0.127	96			61 (Pipe flow= Grate | 16.402 flow)	0.61	375(2)	0.55 (1.24)	0.27		Qg 0.061 Qa 0.061 Do 375.000 CHRT 32: Vo2/2gQa 0.04 H/Do Kg side flow 7.15 end flow 5.24	0.015	7.15	0.110			7.15	0.110	0.12	0.020			8.775 8.675	9.023 9.003	9.133		9.133	9.426	2A/8
10 100	2/8	2/8 to 8/5	1/8;2A/8;2/8			5.00 5.00	202 272		0.85 1.00	0.102 0.102	0.087 0.102	0.087 0.102	49 77 FLOW WIDTH/DEPTH 0.953Dp m	49	1.00	270	27HS.14	49	0		5.27 5.27	199 268	0.583 0.685	510			323 (Pipe flow= Sum upstr | 17.277 atten flows)	0.87	525(2)	1.44 (1.87)	0.20			0.106	1.10	0.116			1.10	0.116	0.52	0.089			8.834 8.684	8.887 8.798	9.003		9.003	9.516	2/8
10 100	4/9	4/9 to 5/9															31				5.00 5.00	202 272	0.000 0.794	600			600 Additional flow= 0.600 cumecs (Pipe flow= Sum upstr | 71.296 atten flows)	4.08	600(2)	2.05 (4.43)	0.58		Qa 0.600 Do 600 CHRT 32: Vo2/2gQa 0.35 H/Do Kg side flow 4.54 end flow 3.87	0.214	4.54	0.972			4.54	0.972	0.88	0.624	0.292	4.35	10.360 7.450	10.360 8.312	11.332		11.332	12.419	4/9
10 100	5A/1	5A/1 to 5B/1	5A/1			5.00 5.00	202 272		0.85 1.00	0.525 0.525	0.446 0.525	0.446 0.525	250 397 FLOW WIDTH/DEPTH 0.448Dp m	250	1.00	2945	26S.3	250	0		5.00 5.00	202 272	0.446 0.525	397			250 (Pipe flow= Grate | 5.573 flow)	1.79	450(2)	1.57 (2.40)	0.06		Qg 0.250 Qa 0.253 Do 450.000 CHRT 32: Vo2/2gQa 0.28 H/Do Kg side flow 5.00 end flow 4.20	0.126	5.00	0.628			5.00	0.628	0.77	0.043			9.150 9.050	9.174 9.131	9.802		9.802	10.096	5A/1
10 100	5B/1	5B/1 to 5/1	5A/1;5B/1			5.00 5.00	202 272		0.85 1.00	0.088 0.088	0.075 0.088	0.075 0.088	42 66 FLOW WIDTH/DEPTH 1.552Wd m	42	0.50	103	1	42	0	6B/1	5.06 5.06	202 271	0.521 0.613	461			292 (Pipe flow= Sum upstr | 9.429 atten flows)	1.06	525(2)	1.30 (2.07)	0.12		Qg 0.042 Qa 0.292 Do 525.000 CHART 33 Angle 5 S/Do 2.5 Du/Do 0.86 Qg/Qa 0.14 K 0.38 S/Do 1.09 cor 0.24 Ku 0.54 Kw 0.54	0.086	0.54	0.047			0.54	0.047	0.42	0.040	0.308	2.19	9.084 8.984	9.084 8.767	9.131		9.131	9.775	5B/1
100 100	5/1	5/1 to 6/1	4A/1 to 4B/2;5A/1 ;5B/1														31				33.88 33.88	14.0 14.0	6.169 44.111	17154			16853 Additional flow= 0.300 cumecs (Pipe flow= Sum upstr	43.773 atten flows)	0.20	2 / 3300 x 14.95 (RCB	1.70 C)(2.22)	0.43		Qa 16.853 Do 2914 Flow 5B/1 made eqv grate flow CHART 33 Angle 0 S/Do 2.5	0.147	0.26	0.038		Du/Do 1.00 Qg/Qa 0.01 K 0.24 S/Do 1.39 cor 0.02 Ku 0.26 Kw 0.26 K vals above for stepped pipes as grate flow	0.26	0.038	0.12	0.052			8.744 8.656	9.294 9.242	9.332		9.332	10.235	5/1
10 100	5A/9	5A/9 to 5/9	5A/9			5.00 5.00	202 272		0.85 1.00	0.063 0.063	0.054 0.063	0.054 0.063	30 48 FLOW WIDTH/DEPTH 0.500Dp m	30	1.00	280	10S.14	30	0		5.00 5.00	202 272	0.054 0.063	48			30 (Pipe flow= Grate | 9.562 flow)	1.05	525(2)	0.13 (2.05)	0.16		Qg 0.030 Qa 0.030 Do 525.000 CHRT 32: Vo2/2gQa 0.00 H/Do Kg side flow 6.27 end flow 4.52	0.001	6.27	0.006			6.27	0.006	0.00	0.000			7.734 7.634	8.312 8.312	8.318		8.318	8.612	5A/9
10 100	5B/9	5B/9 to 5/9	5B/9			5.00 5.00	202 272		0.85 1.00	0.071 0.071	0.060 0.071	0.060 0.071	34 53 FLOW WIDTH/DEPTH 0.567Dp m	34	1.00	280	10S.14	34	0		5.00 5.00	202 272	0.060 0.071	54			34 (Pipe flow= Grate | 12.923 flow)	0.77	525(2)	0.15 (1.77)	0.22		Qg 0.034 Qa 0.034 Do 525.000 CHRT 32: Vo2/2gQa 0.00 H/Do Kg side flow 6.26 end flow 4.52	0.001	6.26	0.007			6.26	0.007	0.01	0.001			7.734 7.634	8.313 8.312	8.320		8.320	8.612	5B/9
10 100	5/9	5/9 to 6/9	5F/9;5G/9;5A/9;5B /9														31				5.58 5.58	196 264	0.605 1.506	1104			911 (Pipe flow= Sum upstr | 15.537 atten flows)	0.13	1200(2)	0.78 (1.25)	0.26		Qa 0.911 Do 1200 Flow 5A/9 made eqv grate flow Flow 5B/9 made eqv grate flow Routine 2.21 CHART 48 Du/Do 0.50 Qu/Qa 0.64 K -1.20 d/Do 2.0 chrt Qg/Qa 0.07 Kg 0.01 d/Do 1.5 chrt Qg/Qa 0.07 Kg 0.01 d/Do 1.22 Interp value Kg 0.01 KuxKw= -1.19 Combined pipes in line case	0.831	0.20	0.006		Join Pipes: 4/9 and 5G/9 Vel1 2.059 Vel2 1.233 Eq Dia 775 Angle 174 Flow 0.849 CHART 33 Angle 0 S/Do 2.5 Du/Do 0.65 Qg/Qa 0.07 K -2.00 S/Do 1.17 cor 0.11 Ku -1.89 Kw -1.89 Interpolated Ku= -1.19 Kw= -1.19 K vals above for stepped pipes as grate flow	0.20	0.006	0.05	0.008			8.039 8.019	8.306 8.298	8.312		8.312	8.965	5/9
10 100	5C/9	5C/9 to 5D/9	5C/9			5.00 5.00	202 272		0.85 1.00	0.914 0.914	0.776 0.914	0.776 0.914	435 690 FLOW WIDTH/DEPTH 0.649Dp m	435	1.00	2945	26S.3	435	0		5.00 5.00	202 272	0.776 0.914	691			435 (Pipe flow= Grate | 9.028 flow)	0.55	750(2)	0.95 (1.89)	0.15		Qg 0.435 Qa 0.435 Do 750.000 CHRT 32: Vo2/2gQa 0.06 H/Do Kg side flow 8.57 end flow 6.31	0.046	8.57	0.394			8.57	0.394	0.14	0.013			8.262 8.212	8.342 8.329	8.736		8.736	9.346	5C/9
10 100	5D/9	5D/9 to 6/9	5C/9;5D/9			5.00 5.00	202 272		0.85 1.00	0.147 0.147	0.125 0.147	0.125 0.147	70 111 FLOW WIDTH/DEPTH 1.909Wd m	86	1.00	145	1	86	0		5.15 5.15	201 270	0.901 1.061	796			518 (Pipe flow= Sum upstr | 12.882 atten flows)	0.78	900(2)	0.79 (2.53)	0.21		Qg 0.086 Qa 0.518 Do 900.000 CHART 34 Angle 28 Case 3 S/Do 2.5 Du/Do 0.83 Qg/Qa 0.17 K 0.42 S/Do 1.18 cor 0.26 Ku 0.68 Kw 0.68	0.032	0.68	0.021			0.68	0.021	0.08	0.010			8.165 8.065	8.308 8.298	8.329		8.329	9.026	5D/9
10 100	6A/3	6A/3 to 6/3	6A/3			5.00 5.00	202 272		0.85 1.00	0.064 0.064	0.054 0.064	0.054 0.064	30 48 FLOW WIDTH/DEPTH 0.629Wd m	31	3.00	252	1	30	1		5.00 5.00	202 272	0.054 0.064	48			30 (Pipe flow= Grate | 2.179 flow)	1.38	375(2)	0.27 (1.86)	0.04		Qg 0.030 Qa 0.030 Do 375.000 CHRT 32: Vo2/2gQa 0.01 H/Do Kg side flow 10.58 end flow 7.42 Part full downstream pipe	0.004	1.00	0.012		Upstream HGL 8.815 pipe obv 8.975 Set Kp to 1	1.00 below outlet	0.012	0.03	0.001	0.097	1.33	8.975 8.945	8.893 8.892	8.815		8.815	9.756	6A/3
10 100	6B/3	6B/3 to 6/3	6B/3			5.00 5.00	202 272		0.85 1.00	0.041 0.041	0.035 0.041	0.035 0.041	20 31 FLOW WIDTH/DEPTH 0.389Wd m	21	3.00	252	1	20	1	8C/3	5.00 5.00	202 272	0.035 0.041	31			20 (Pipe flow= Grate | 9.042 flow)	1.11	375(2)	0.19 (1.67)	0.15		Qg 0.020 Qa 0.020 Do 375.000 CHRT 32: Vo2/2gQa 0.00 H/Do Kg side flow 10.74 end flow 7.51 Part full downstream pipe	0.002	1.00	0.034		Upstream HGL 8.837 pipe obv 9.075 Set Kp to 1	1.00 below outlet	0.034	0.01	0.001	0.083	1.09	9.075 8.975	8.803 8.802	8.837		8.837	9.756	6B/3
10 100	6/3	6/3 to 7/3	1/3 to 6A/3;6B/3														31				6.03 6.03	191 258	1.796 2.112	1514			951 (Pipe flow= Sum upstr | 13.269 atten flows)	0.75	900(2)	1.45 (2.50)	0.15		Qa 0.951 Do 900 Flow 6A/3 made eqv grate flow Flow 6B/3 made eqv grate flow CHART 33 Angle 1 S/Do 2.5	0.107	0.24	0.025		Du/Do 0.92 Qg/Qa 0.05 K 0.16 S/Do 1.10 cor 0.08 Ku 0.24 Kw 0.24 K vals above for stepped pipes as grate flow	0.24	0.025	0.25	0.034			8.715 8.615	8.777 8.743	8.802		8.802	9.814	6/3
10 100	8A/5	8A/5 to 8B/5	8A/5			5.00 5.00	202 272		0.85 1.00	0.705 0.705	0.599 0.705	0.599 0.705	336 533 FLOW WIDTH/DEPTH 0.545Dp m	336	1.00	2945	26S.3	336	0		5.00 5.00	202 272	0.599 0.705	533			336 (Pipe flow= Grate | 8.311 flow)	0.72	600(2)	1.15 (1.86)	0.12			0.067	1.00	0.067			1.00	0.067	0.27	0.023			8.510 8.450	8.867 8.844	8.934		8.934	9.458	8A/5
10 100	8B/5	8B/5 to 8/5	8A/5;8B/5			5.00 5.00	202 272		0.85 1.00	0.091 0.091	0.077 0.091	0.077 0.091	43 69 FLOW WIDTH/DEPTH 1.493Wd m DOWNSTREAM 1.180m	74	4.50	4.99	8	31	43		5.12 5.12	201 271	0.676 0.796	599			365 (Pipe flow= Sum upstr | 13.914 atten flows)	0.72	750(2)	0.80 (2.16)	0.23			0.033	1.00	0.032			1.00	0.032	0.10	0.014			8.562 8.462	8.812 8.798	8.844		8.844	9.189	8B/5
10 100	8/5	8/5 to GPT/5	1/7 to 7A/5;1/8;2A /8;2/8;8A/5;8B/5														31				8.15 8.15	173 236	3.578 4.212	2761			1673 (Pipe flow= Sum upstr | 23.997 atten flows)	0.50	1050(2)	1.87 (2.25)	0.21			0.178	1.00	0.178			1.00	0.178	0.35	0.083			8.536 8.416	8.620 8.537	8.798		8.798	9.586	8/5
10 100	GPT/5	GPT/5 to 8/1	1/7 to 7A/5;1/8;2A /8;2/8;8A/5;8B/5																		8.36 8.36	172 234	3.578 4.212	2738			1673 (Pipe flow= Sum upstr | 7.763 atten flows)	0.64	1050(2)	1.87 (2.56)	0.07		Qa 1.673 Do 1050 CHART 54 Du/Do100 alpha 27 Kw 0.22 Vu 1.93 WSE 0.16 Ku 0.68 Kw 0.92	0.178	0.68	0.121			0.92	0.164	0.35	0.027	0.678	2.79	8.416 8.366	8.416 8.197	8.537		8.580	9.648	GPT/5

PLANS AND DOCUMENTS
referred to in the PDA APPROVAL
23 DEC 2013
MEDQ

Issue	Description	Author	Date
01	ISSUE FOR OPW APPROVAL	BD	14/10/13

100mm on Original

Scale

Surveyor: BENNETT+BENNETT
Property Consultants, Surveyors + Town Planners
All mail to: PO Box 5021, GCMC, Qld. 9726
mail@bennettandbennett.com.au
BBH Pty Ltd A.C.N. 010 427 521
COOMERA OFFICE: 9 Jowett Street, Coomera, 4209. Ph (07) 5573 6177. Fax (07) 5529 4342

Architect: ARCHIPELAGO

Filename: C2310-C2317-AA005621-SWD CALC.DWG

Client: Queensland Government
DEPARTMENT OF STATE DEVELOPMENT, INFRASTRUCTURE & PLANNING

Status: FOR APPROVAL
CONSTRUCTION SUBJECT TO COUNCIL APPROVAL
Approved: R.E.P.Q. No: 8677
Scales
Original Size: A1
Height Datum: AHD
Grid: MGA
Current Issue Signatures: Author B.DAVEY; Designer T.DINGLE; Reviewer B.THOMPSON
© Copyright reserved

Project: GOLD COAST PARKLANDS REDEVELOPMENT
TRUNK INFRASTRUCTURE

Title: STORMWATER CALCULATION TABLES - SHEET 6 OF 8

Hyder
HYDER CONSULTING PTY. LTD
ABN 76 104 485 289
P O Box 1653
Southport, QLD 4215
Australia
Tel: +61 (07) 5532 3933
Fax: +61 (07) 5591 4778
www.hyderconsulting.com

Drawing No.	Project No.	Issue
C2315	AA005621	01

14/Oct/2013 1:36 PM \\hc-aus-gc-fs-01\jobs\AA005621\E-CAD\C-Civil\D-Final\C2310-C2317-AA005621-SWD CALC.dwg V1

LOCATION					TIME		SUB-CATCHMENT RUNOFF							INLET DESIGN							DRAIN DESIGN														HEADLOSSES										PART FULL		DESIGN LEVELS						
DESIGN ARI	STRUCTURE No.	DRAIN SECTION	SUB-CATCHMENTS CONTRIBUTING	LAND USE	SLOPE OF CATCHMENT	SUB-CATCHMENT TIME OF CONC.	RAINFALL INTENSITY	10yr RUNOFF CO-EFFICIENT	CO-EFFICIENT OF RUNOFF	SUB-CATCHMENT AREA	EQUIVALENT AREA	SUM OF (C x A)	SUB-CATCHMENT DISCHARGE	FLOW IN K&C (INC. BYPASS)	ROAD GRADE AT INLET	MINOR FLOW ROAD CAPACITY	INLET TYPE	FLOW INTO INLET	BYPASS FLOW	BYPASS STRUCTURE No.	CRITICAL TIME OF CONC.	RAINFALL INTENSITY	TOTAL (C x A)	MAJOR TOTAL FLOW	MAJOR SURFACE FLOW CAPACITY	MAJOR SURFACE FLOW	PIPE FLOW	REACH LENGTH	PIPE GRADE	PIPE / BOX DIMENSIONS (CLASS)	FLOW VELOCITY FULL (PIPE GRADE VELOCITY)	TIME OF FLOW IN REACH	STRUCTURE CHART No.	STRUCTURE RATIOS FOR 'K' VALUE CALCULATIONS	VELOCITY HEAD	U/S HEADLOSS COEFFICIENT	U/S PIPE STRUCT. HEADLOSS	LAT. HEADLOSS CO-EFFICIENT	LAT. PIPE STRUCT. HEADLOSS	W.S.E. CO-EFFICIENT	CHANGE IN W.S.E	PIPE FRICTION SLOPE	PIPE FRICTION HEADLOSS (L x Sf)	DEPTH	VELOCITY	OBVERT LEVELS	DRAIN SECTION H.G.L	UPSTREAM H.G.L	LAT. H.G.L	W.S.E.	SURFACE OR K&C INVERT LEVEL	STRUCTURE No.
						tc	I	C10	C	A	C×A	+CA	Q					Qg	Qb		tc	I	+CA	Qt	Qm	Qs	Qp	L	S		V	T			V2/2g	Ku	hu	Kl	hl	Kw	hw	Sf	hf		Vp									
yr's					%	min	mm/h			ha	ha	ha	l/s	l/s	%	l/s		l/s	l/s		min	mm/h	ha	l/s	l/s	l/s	l/s	m	%	mm	m/s	m/s			m		m		m		m	%	m	m	m/s	m	m	m	m	m	m	m	
10 100	1A/3	1A/3 to 7/3	1A/3			5.00 5.00	202 272		0.85 1.00	0.146 0.146	0.124 0.146	0.124 0.146	70 110 FLOW WIDTH/DEPTH 2.072Wd m	71	0.50	103	1	70	1	8A/3	5.00 5.00	202 272	0.124 0.146	110			70 (Pipe flow= Grate flow)	11.579	0.86	375(2)	0.63 (1.47)	0.19		Qg 0.070 Qo 0.070 Do 375.000 CHRT 32: Vo2/2gDo 0.05 H/Do Kg side flow 7.37 end flow 5.50	0.020	7.37	0.150			7.37	0.150	0.16	0.018			8.575 8.475	8.761 8.743	8.911		8.911	9.383	1A/3
10 100	7/3	7/3 to 8/3	1/12 to 1B/3;1/3 to 6A/3;6B/3;1A/3														31				7.41 7.41	179 243	5.633 6.625	4472			2811 (Pipe flow= Sum upstr	97.619 atten flows)	0.41	1050(2) x 2	1.57 (2.04)	1.04		Qo 2.811 Do 1484 Flow 1A/3 made eqv grate flow Routine 3.1 Join Pipes: 5/4 and 1B/3 Vel1 1.817 Vel2 1.314 Eq Dia 1165 Angle 183 Flow 1.857 Routine 2.1 CHART 48 Du/Do 0.79 Qu/Qo 0.66 K 0.59 d/Do 2.0 chrt Qg/Qo 0.02 Kg 0.01 d/Do 1.5 chrt Qg/Qo 0.02 Kg 0.01 d/Do 1.00 Interp value Kg 0.01	0.126	0.61	0.077	Kp=Kw= 0.60 Combined pipes in line case Join Pipes: Eqv 5/4 & 1B/3 and 6/3 Vel1 1.143 Vel2 1.420 Eq Dia 1484 Angle 211 Flow 2.749 CHART 33 Angle 0 S/Do 2.5 Du/Do 0.99 Qg/Qo 0.02 K 0.24 S/Do 1.03 cor 0.04 Ku 0.28 Kw 0.28 Interpolated Ku= 0.01 Kw= 0.01 K vals above for stepped pipes as grate flow		0.61	0.077	0.24	0.239	0.703	2.25	8.666 8.266	8.666 8.339	8.743		8.743	9.537	7/3
10 100	6A/9	6A/9 to 6/9	6A/9			5.00 5.00	202 272		0.85 1.00	0.212 0.212	0.180 0.212	0.180 0.212	101 160 FLOW WIDTH/DEPTH 2.573Dp m	116	0.50	280	105.14	116	0		5.00 5.00	202 272	0.180 0.212				116 (Pipe flow= Grate flow)	12.008	0.42	375(2)	1.05 (1.02)	0.19		Qg 0.116 Qo 0.116 Do 375.000 CHRT 32: Vo2/2gDo 0.15 H/Do Kg side flow 6.01 end flow 4.79	0.056	6.07	0.341			6.07	0.341	0.44	0.053			8.225 8.115	8.351 8.298	8.692		8.692	8.968	6A/9
10 100	6/9	6/9 to GPT/9	1/10 to 5B/9;5C/9;5D/9;6A/9														31				7.02 7.02	182 247	2.370 3.584	2459			1738 (Pipe flow= Sum upstr	13.510 atten flows)	0.15	1200(2) 750(2)	1.16 (1.34)	0.19			0.069	1.00	0.069			1.00	0.069	0.11	0.015			7.999 7.979	8.229 8.214	8.298		8.298	9.060	6/9
10 100	GPT/9	GPT/9 to 6C/9	1/10 to 5B/9;5C/9;5D/9;6A/9														31				7.21 7.21	180 245	2.370 3.584	2439			1738 (Pipe flow= Sum upstr	4.460 atten flows)	0.22	1200(2) 750(2)	1.16 (1.65)	0.06			0.069	1.00	0.069			1.00	0.069	0.11	0.005			7.979 7.969	8.145 8.140	8.214		8.214	9.367	GPT/9
10 100	6C/9	6C/9 to 7/9	1/10 to 5B/9;5C/9;5D/9;6A/9														31				7.27 7.27	180 244	2.370 3.584	2429			1738 (Pipe flow= Sum upstr	44.332 atten flows)	0.18	1200(2) x 2	0.74 (1.68)	0.74		Qo 1.738 Do 1697 CHART 50 Du/Do 0.83 alpha 0 K'w 0.05 Vu 1.12 WSE -0.02 Ku -0.65 Kw -0.57	0.028	0.20	0.006			0.20	0.006	0.05	0.020			7.949 7.869	8.134 8.114	8.140		8.140	9.372	6C/9
10 100	7/9	7/9 to 10/1	1/10 to 5B/9;5C/9;5D/9;6A/9														31				8.01 8.01	174 237	2.370 3.584	2360			1738 (Pipe flow= Sum upstr	43.547 atten flows)	0.14	1200(2) x 2	0.74 (1.29)	0.73		Qo 1.738 Do 1697 CHART 50 Du/Do 1.00 alpha 10 K'w 0.18 Vu 0.77 WSE 0.02 Ku 0.45 Kw 0.64	0.028	0.45	0.012			0.64	0.018	0.05	0.020			7.849 7.789	8.102 8.082	8.114		8.120	9.008	7/9
10 100	8B/3	8B/3 to 8C/3	8B/3			5.00 5.00	202 272		0.85 1.00	0.490 0.490	0.417 0.490	0.417 0.490	234 370 FLOW WIDTH/DEPTH 0.429Dp m	294	1.00	2945	265.3	234	0		5.00 5.00	202 272	0.417 0.490	370			234 (Pipe flow= Grate flow)	6.003	0.83	525(2)	1.04 (1.83)	0.10		Qg 0.234 Qo 0.234 Do 525.000 CHRT 32: Vo2/2gDo 0.10 H/Do Kg side flow 5.56 end flow 4.33	0.055	5.56	0.307			5.56	0.307	0.27	0.016			7.984 7.934	8.392 8.376	8.699		8.699	9.230	8B/3
10 100	8C/3	8C/3 to 8/3	8B/3;8C/3			5.00 5.00	202 272		0.85 1.00	0.085 0.085	0.072 0.085	0.072 0.085	40 64 FLOW WIDTH/DEPTH 0.846Dp m	41	1.00	270	2TMS.14	41	0		5.10 5.10	201 271	0.489 0.575	433			274 (Pipe flow= Sum upstr	7.291 atten flows)	0.56	750(2)	0.60 (2.49)	0.12			0.018	1.80	0.033			1.80	0.033	0.06	0.004			8.082 8.012	8.343 8.339	8.376		8.376	8.851	8C/3
10 100	6A/1	6A/1 to 6/1	6A/1			5.00 5.00	202 272		0.85 1.00	0.149 0.149	0.127 0.149	0.127 0.149	71 113 FLOW WIDTH/DEPTH 2.072Wd m	71	0.50	103	1	70	1		5.00 5.00	202 272	0.127 0.150	113			70 (Pipe flow= Grate flow)	9.385	1.07	375(2)	0.63 (1.54)	0.16		Qg 0.070 Qo 0.070 Do 375.000 CHRT 32: Vo2/2gDo 0.05 H/Do Kg side flow 9.11 end flow 6.70 Part full downstream pipe	0.020	1.00	0.120	Upstream HGL 8.782 below outlet pipe obv 8.875 Set Kp to 1		1.00	0.120	0.16	0.015	0.162	1.53	8.875 8.775	8.662 8.562	8.782		8.782	9.560	6A/1
10 100	6B/1	6B/1 to 6/1	6B/1			5.00 5.00	202 272		0.85 1.00	0.072 0.072	0.061 0.072	0.061 0.072	34 54 FLOW WIDTH/DEPTH 1.363Wd m	34	0.50	103	1	34	0		5.00 5.00	202 272	0.061 0.072	54			34 (Pipe flow= Grate flow)	9.764	0.51	375(2)	0.31 (1.14)	0.16		Qg 0.034 Qo 0.034 Do 375.000 CHRT 32: Vo2/2gDo 0.01 H/Do Kg side flow 10.48 end flow 7.37 Part full downstream pipe	0.005	1.00	0.048	Upstream HGL 8.631 below outlet pipe obv 8.825 Set Kp to 1		1.00	0.048	0.04	0.004	0.133	0.96	8.825 8.775	8.583 8.533	8.631		8.631	9.564	6B/1
10 100	8A/3	8A/3 to 8/3	8A/3			5.00 5.00	202 272		0.85 1.00	0.190 0.190	0.162 0.190	0.162 0.190	91 144 FLOW WIDTH/DEPTH 2.013Dp m	91	0.92	280	105.14	92	0		5.00 5.00	202 272	0.162 0.190	144			92 (Pipe flow= Grate flow)	7.292	0.69	525(2)	0.41 (1.66)	0.12		Qg 0.092 Qo 0.092 Do 525.000 CHRT 32: Vo2/2gDo 0.02 H/Do Kg side flow 8.49 end flow 6.03	0.009	8.49	0.073			8.49	0.073	0.04	0.003			8.084 8.034	8.342 8.339	8.415		8.415	8.851	8A/3
10 100	8/3	8/3 to 8/1	1/12 to 1A/3;6B/3;8C/3;8A/3														31				8.45 8.45	171 233	6.284 7.390	4783			2996 (Pipe flow= Sum upstr	23.510 atten flows)	0.34	1200(2) x 2	1.28 (2.03)	0.31		Part full downstream pipe Upstream HGL 8.339 below outlet pipe obv 8.399 Set Kp to 1	0.084	1.10	0.110			1.10	0.110	0.14	0.032	0.703	2.15	8.399 8.319	8.229 8.197	8.339		8.339	9.080	8/3
100 100	6/1	6/1 to 8/1	4A/1 to 4B/2;5A/1;5B/1;6A/1;6B/1														31				34.30 34.30	139 159	6.721 44.663	17245			17042 (Pipe flow= Sum upstr	37.520 atten flows)	0.93	2 / 3300 x 1495 (RC)	1.72 (4.77)	0.36		Qo 17.042 Do 2914 Flow 6A/1 made eqv grate flow Flow 6B/1 made eqv grate flow Angle 25 Chart 36 S/Do 2.5 chart Du/Do 1.00 K0 1.51 K0.5 1.86 Qu/Qo 1.00 Cg 0.01 K 1.51 S/Do 2.0 K0 1.79 K0.5 2.07 K 1.80 S/Do 1.5 K0 2.11 K0.5 2.54 K 2.11	0.151	1.84	0.277	Interp val for S/Do 1.27 Kw 2.25 CHART 36 S/Do 2.0 K0 1.55 K0.5 1.74 K 1.55 S/Do 1.5 K0 1.75 K0.5 1.80 K 1.75 Interp val for S/Do 1.27 Ku 1.84 K vals above for stepped pipes as grate flow		2.25	0.339	0.12	0.046			8.499 8.149	8.567 8.521	8.844		8.906	10.016	6/1
100 100	8/1	8/1 to 9/1	1/7 to 6B/1;1/12 to 1A/3;8B/3;8C/3;8A/3														31				34.66 34.66	138 138	18.323 68.500	26258			26038 Additional flow= 4.590 cumecs (Pipe flow= Sum upstr	77.949 atten flows)	0.26	3 / 3600 x 1495 (RC)	1.61 (2.56)	0.81		Qo 26.038 Do 3665 Flow GPT/5 made eqv grate flow Routine 2.16 Equiv cefin 68 CHART 49 High vel (all 6/1 Dhv 2914 Qhv 16.919 Dhv/Qhv 1.7 Dhv/Do 0.80 Dhv/Do 0.65 H 3.20 Low vel (atrl 8/3 Dlv 1697 Qlv 2.832 Dlv/Do 0.46 Qlv/Qo 0.11 L -0.03 H-L 3.23 Ku=Kw= 3.23 Combined pipes in line case Join Pipes: 6/1 and 8/3 Vel1 2.537 Vel2 1.252 Eq Dia 3269 Angle 194 Flow 19.751 CHART 33 Angle 0 S/Do 2.5 Du/Do 0.89 Qg/Qo 0.06 K 0.11	0.132	0.37	0.049	S/Do 1.32 cor 0.08 Ku 0.19 Kw 0.19 Interpolated Ku= 0.93 Kw= 0.93 K vals above for stepped pipes as grate flow grate flow decreased by 1.597 from GPT/5 Routine 3.1 Join Pipes: 8/3 and 6/1 Vel1 1.251 Vel2 2.537 Eq Dia 3269 Angle 194 Flow 19.751 Routine 2.24 Join Pipes: Eqv 8/3 & 6/1 and GPT/5 Vel1 2.353 Vel2 1.844 Eq Dia 3426 Angle 198 Flow 21.248 CHART 50 Du/Do 0.93 alpha 18 K'w 0.21 Vu 2.32 WSE 0.10 Ku 0.33 Kw 0.76 K vals step pipes as pipe flow Ku 0.33 Kw 0.76 Averaged Ku 0.37 Kw 0.77		0.77	0.101	0.10	0.080			8.019 7.813	8.472 8.392	8.521		8.573	9.354	8/1

PLANS AND DOCUMENTS
referred to in the PDA APPROVAL

23 DEC 2013

MEDQ

Issue	Description	Author	Date
02	G.C.C.C. R.F.I.	BD	14/11/13
01	ISSUE FOR OPW APPROVAL	BD	14/10/13

100mm on Original

Scale

Surveyor: BENNETT + BENNETT
Property Consultants, Surveyors & Town Planners
All mail to: PO Box 5021, GCMC, Qld 9726
mail@bennettandbennett.com.au
BBH Pty Ltd A.C.N. 010 427 101
COOMERA OFFICE: 9 Lowed Street, Coomera 4209, Ph (07) 5573 8177, Fax (07) 5520 4342

Architect: ARCHIPELAGO

Filename: C2310-C2317-AA005621-SWD CALC.DWG

Client: Queensland Government
DEPARTMENT OF STATE DEVELOPMENT, INFRASTRUCTURE & PLANNING

Status: FOR APPROVAL
NOT FOR CONSTRUCTION

Approved: R.E.P.Q. No: 8677

Scales

Original Size: A1

Height Datum: AHD

Grid: MGA

Current Issue Signatures
Author: B.DAVEY
Designer: T.DINGLE
Reviewer: B.THOMPSON

© Copyright reserved

Project: GOLD COAST PARKLANDS REDEVELOPMENT
TRUNK INFRASTRUCTURE

Title: STORMWATER CALCULATION TABLES - SHEET 7 OF 8

Hyder
HYDER CONSULTING PTY. LTD
ABN 76 104 485 289
P.O Box 1653
Southport, QLD 4215
Australia
Tel: +61 (07) 5532 3933
Fax: +61 (07) 5591 4778
www.hyderconsulting.com

Drawing No. C2316 — Project No. AA005621 — Issue 02

14/Nov/2013 12:32 PM F:\AA005621\E-CAD\C-Civil\D-Final\C2310-C2317-AA005621-SWD CALC.dwg

V1

LOCATION					TIME		SUB-CATCHMENT RUNOFF						INLET DESIGN							DRAIN DESIGN															HEADLOSSES									PART FULL		DESIGN LEVELS					
DESIGN ARI	STRUCTURE No.	DRAIN SECTION	SUB-CATCHMENTS CONTRIBUTING	LAND USE	SLOPE OF CATCHMENT	SUB-CATCHMENT TIME OF CONC.	RAINFALL INTENSITY	10yr RUNOFF CO-EFFICIENT	CO-EFFICIENT OF RUNOFF	SUB-CATCHMENT AREA	EQUIVALENT AREA	SUM OF (C x A)	SUB-CATCHMENT DISCHARGE	FLOW IN K&C (INC. BYPASS)	ROAD GRADE AT INLET	MINOR FLOW ROAD CAPACITY	INLET TYPE	FLOW INTO INLET	BYPASS FLOW	BYPASS STRUCTURE No.	CRITICAL TIME OF CONC.	RAINFALL INTENSITY	TOTAL (C x A)	MAJOR TOTAL FLOW	MAJOR SURFACE FLOW CAPACITY	MAJOR SURFACE FLOW	PIPE FLOW	REACH LENGTH	PIPE GRADE	PIPE / BOX DIMENSIONS (CLASS)	FLOW VELOCITY FULL (PIPE GRADE VELOCITY)	TIME OF FLOW IN REACH	STRUCTURE CHART No.	STRUCTURE RATIOS FOR 'K' VALUE CALCULATIONS	VELOCITY HEAD	U/S HEADLOSS COEFFICIENT	U/S PIPE STRUCT. HEADLOSS	LAT. HEADLOSS CO-EFFICIENT	LAT. PIPE STRUCT. HEADLOSS	W.S.E CO-EFFICIENT	CHANGE IN W.S.E	PIPE FRICTION SLOPE	PIPE FRICTION HEADLOSS (L x Sf)	DEPTH	VELOCITY	OBVERT LEVELS	DRAIN SECTION H.G.L	UPSTREAM H.G.L	LAT. H.G.L	W.S.E.	SURFACE OR K&C INVERT LEVEL	STRUCTURE No.
						Tc	I	C10	C	A	CxA	+CA	Q					Qg	Qb		Tc	I	+CA	Qt	Qm	Qs	Qp	L	S		V	T			V2/2g	Ku	hu	Kl	hl	Kw	hw	Sf	hf		Vp								
yrs					%	min	mm/h			ha	ha	ha	l/s	l/s	%	l/s		l/s	l/s		min	mm/h	ha	l/s	l/s	l/s	l/s	m	%	mm	m/s	min			m		m		m		m	%	m	m	m/s	m	m	m	m	m	m	m	
100 100	9/1	9/1 to 10/1	1/7 to 8A/3,1/21														31				35.47 35.47	137 137	18.943 69.120	26304			26086 [Pipe flow= Sum upstr	76.456 atten flows]	0.20	3 / 3600 x 1495 (RCBC)	1.61 (2.27)	0.39		Qo 26.086 Do 3665 Flow 1/21 made eqv grate flow CHART 33 Angle 1 S/Do 2.5	0.132	0.24	0.032			0.24 Du/Do 1.00 Qg/Qo 0.01 K 0.23 S/Do 1.40 cor 0.01 Ku 0.24 Kw 0.24 K vals above for stepped pipes as grate flow	0.032	0.10	0.078			7.797 7.642	8.360 8.282	8.392		8.392	9.000	9/1
100 100	10/1	10/1 to HW/1	1/10 to 1/21;1/20														31				36.26 36.26	136 136	22.333 78.863	29793			29618 Additional flow: 2.100 cumecs [Pipe flow= Sum upstr	61.230 atten flows]	0.20	3 / 3600 x 1495 (RCBC)	1.83 (2.25)	0.56			0.171	1.00	0.171			1.00	0.171	0.13	0.081			7.622 7.499	8.111 8.030	8.282		8.282	9.000	10/1
10 100	5A/EX1	5A/EX1 to 5/EX1	5A/EX1			5.00 5.00	202 272		0.85 1.00	0.072 0.072	0.061 0.072	0.061 0.072	34 54 FLOW WIDTH/DEPTH 1.248Wd m	34 34	0.66 0.66	118 118	1	34	0	1B/14	5.00 5.00	202 272	0.061 0.072	54			34 [Pipe flow= Grate flow]	5.636	0.88	375(2)	0.31 (1.49)	0.03		Qo 0.034 Qg 0.034 Do 375.000 CHRT 32: Vo2/2gDo 0.01 H/Do Kg side flow 10.48 end flow 7.31 Part full downstream pipe	0.045	1.00	0.048			1.00 Upstream HGL 9.780 below outlet pipe abv 9.975 Set Kp to 1	0.073	0.04	0.032	0.115	1.18	9.825 9.925	9.716 9.668	9.786		9.786	10.646	5A/EX1
10 100	5B/EX1	5B/EX1 to 5/EX1	5B/EX1			5.00 5.00	202 272		0.85 1.00	0.072 0.072	0.061 0.072	0.061 0.072	34 54 FLOW WIDTH/DEPTH 1.248Wd m	34 34	0.66 0.66	118 118	1	34	0	1B/14	5.00 5.00	202 272	0.061 0.072	54			34 [Pipe flow= Grate flow]	9.477	0.53	375(2)	0.31 (1.15)	0.16		Qg 0.034 Qo 0.034 Do 375.000 CHRT 32: Vo2/2gDo 0.01 H/Do Kg side flow 10.48 end flow 7.37 Part full downstream pipe	0.045	1.00	0.048			1.00 Upstream HGL 9.780 below outlet pipe abv 9.975 Set Kp to 1	0.048	0.04	0.064	0.132	0.97	9.975 9.925	9.732 9.682	9.780		9.780	10.646	5B/EX1
10 100	5/EX1	5/EX1 to 1/14	5A/EX1,5B/EX1														31				15.60 15.60	139 192	0.122 5.769	3077			3047 Additional flow: 3.000 cumecs [Pipe flow= Sum upstr	57.988 atten flows]	0.34	1500(2) x 2	0.84 (2.37)	0.97		Qo 3.047 Do 2121 Flow 5A/EX1 made eqv grate flow Flow 5B/EX1 made eqv grate flow CHRT 32: Vo2/2gDo 0.02 H/Do Kg side flow 10.15 end flow 7.20 K vals above for stepped pipes as grate flow	0.036	1.00	0.286			1.00 Part full downstream pipe Upstream HGL 8.966 below outlet pipe abv 9.624 Set Kp to 1	0.206	0.04	0.025	0.624	2.17	9.624 9.424	8.760 8.735	8.966		8.966	10.813	5/EX1
10 100	1A/14	1A/14 to 1/14	1A/14			5.00 5.00	202 272		0.85 1.00	0.180 0.180	0.153 0.180	0.153 0.180	86 136 FLOW WIDTH/DEPTH 1.863Dp m	86 86	1.00 1.00	280 280	105.14	86	0		5.00 5.00	202 272	0.153 0.180	136			86 [Pipe flow= Grate flow]	7.510	0.67	375(2)	0.78 (1.29)	0.13		Qg 0.086 Qo 0.086 Do 375.000 CHRT 32: Vo2/2gDo 0.08 H/Do Kg side flow 8.30 end flow 6.29 Part full downstream pipe	0.031	1.00	0.094			1.00 Upstream HGL 9.553 below outlet pipe abv 9.625 Set Kp to 1	0.094	0.24	0.018	0.209	1.35	9.625 9.575	9.459 9.409	9.553		9.553	10.336	1A/14
10 100	1B/14	1B/14 to 1/14	1B/14			5.00 5.00	202 272		0.85 1.00	0.146 0.146	0.124 0.146	0.124 0.146	70 110 FLOW WIDTH/DEPTH 1.447Dp m	70 70	1.00 1.00	280 280	105.14	70	0		5.00 5.00	202 272	0.124 0.146	110			70 [Pipe flow= Grate flow]	7.510	0.67	375(2)	0.63 (1.29)	0.13		Qg 0.070 Qo 0.070 Do 375.000 CHRT 32: Vo2/2gDo 0.05 H/Do Kg side flow 9.11 end flow 6.78 Part full downstream pipe	0.020	1.00	0.084			1.00 Upstream HGL 9.855 below outlet pipe abv 9.961 Set Kp to 1	0.084	0.16	0.012	0.185	1.29	9.961 9.911	9.771 9.721	9.855		9.855	10.336	1B/14
10 100	1/14	1/14 to 2/15	5A/EX1,5B/EX1,1A/14,1B/14														31				15.97 15.97	135 188	0.399 5.855	3183			3063 [Pipe flow= Sum upstr	41.225 atten flows]	0.36	1500(2) x 2	0.84 (2.44)	0.69		Qo 3.063 Do 2121 Flow 1A/14 made eqv grate flow Flow 1B/14 made eqv grate flow CHART 33 Angle 4 S/Do 2.5 Du/Do 1.00 Qg/Do 0.03 K 0.30 S/Do 1.01 cor 0.06 Ku 0.36 Kw 0.35	0.036	1.00	0.167			1.00 K vals above for stepped pipes as grate flow Part full downstream pipe Upstream HGL 8.735 below outlet pipe abv 9.374 Set Kp to 1	0.167	0.04	0.018	0.617	2.21	9.374 9.224	8.568 8.550	8.735		8.735	10.719	1/14
10 100	1/16	1/16 to 2/16	1/16			5.00 5.00	202 272		0.85 1.00	0.330 0.330	0.281 0.330	0.281 0.330	158 249 FLOW WIDTH/DEPTH 0.560Dp m	158 158	0.00 0.00	157 157	205.14	157	1		5.00 5.00	202 272	0.281 0.330	249			157 [Pipe flow= Grate flow]	3.465	0.87	450(2)	0.99 (1.67)	0.06		Qg 0.157 Qo 0.157 Do 450.000 CHRT 32: Vo2/2gDo 0.11 H/Do Kg side flow 7.71 end flow 5.92 Part full downstream pipe	0.050	1.00	0.069			1.00 Upstream HGL 14.875 below outlet pipe abv 14.900 Set Kp to 1	0.069	0.30	0.011	0.250	1.74	14.900 14.870	14.806 14.795	14.875		14.875	15.449	1/16
10 100	2/16	2/16 to 3/16	1/16														31				5.96 5.96	202 271	0.281 0.330	248			157 [Pipe flow= Sum upstr	64.669 atten flows]	0.49	450(2)	0.99 (1.26)	1.08		Qo 0.157 Do 450 CHART 51 H:50 Do 450 theta r/Do 0.56 Du 450 Du/Do 1.00 Kd 0.82 Kw 0.23 Vu 0.99 WSE 0.05 Ku 0.82 Kw 1.05	0.050	1.00	0.070			1.00 Part full downstream pipe Upstream HGL 14.795 below outlet pipe abv 14.820 Set Kp to 1	0.070	0.30	0.196	0.300	1.39	14.820 14.500	14.725 14.529	14.795		14.795	16.198	2/16
10 100	3/16	3/16 to 4/16	1/15														31				6.14 6.14	190 257	0.281 0.330	236			157 [Pipe flow= Sum upstr	22.266 atten flows]	0.45	450(2)	0.99 (1.20)	0.37		Qo 0.157 Do 450 CHART 51 H:50 Do 450 theta r/Do 1.15 Du 450 Du/Do 1.00 Kd 1.58 Kw 0.28 Vu 0.99 WSE 0.09 Ku 1.58 Kw 1.86	0.050	1.58	0.079			1.86	0.093	0.30	0.068	0.311	1.34	14.450 14.350	14.450 14.374	14.529		14.543	15.682	3/16
10 100	4/16	4/16 to 3/2	1/16														31				6.51 6.51	186 252	0.281 0.330	231			157 [Pipe flow= Sum upstr	41.599 atten flows]	6.85	375(2)	1.42 (4.15)	0.49		Qo 0.157 Do 375 Flow 3/16 made eqv grate flow CHRT 32: Vo2/2gDo 0.27 H/Do Kg side flow 5.12 end flow 4.38 K vals above for stepped pipes as grate flow grate flow decreased by 0.157 from 3/16	0.103	1.45	0.149			1.55 CHART 51 H: 50 Do 375 theta r/Do 0.40 Du 450 Du/Do 1.20 Kd 1.45 Kw 0.21 Vu 0.99 WSE 0.16 Ku 1.45 Kw 1.55 K vals step pipes as pipe flow Ku 1.45 Kw 1.55	0.160	0.80	0.334	0.151	3.76	14.225 11.375	14.225 11.702	14.374		14.385	15.261	4/16
	1/21	1/21 to 9/1	1/21			5.00 5.00	202 272		0.85 1.00	0.620 0.620	0.527 0.620	0.527 0.620	296 468 FLOW WIDTH/DEPTH 0.812Dp m	296 296	0.00 0.00	597 597	205.3	296	0		5.00 5.00	202 272	0.527 0.620	468			296 [Pipe flow= Grate flow]	24.578	0.81	525(2)	1.32 (1.81)	0.31			0.089	1.10	0.098			1.10	0.098	0.43	0.106			7.534 7.334	8.202 8.096	8.300		8.300	8.521	1/21
	1/20	1/20 to 10/1	1/20			5.00 5.00	202 272		0.85 1.00	0.600 0.600	0.510 0.600	0.510 0.600	286 453 FLOW WIDTH/DEPTH 0.808Dp m	286 286	0.00 0.00	597 597	205.3	286	0		5.00 5.00	202 272	0.510 0.600	453			286 [Pipe flow= Grate flow]	28.559	0.70	525(2)	1.28 (1.68)	0.37			0.084	1.10	0.091			1.10	0.091	0.40	0.116			7.534 7.334	8.190 8.074	8.281		8.281	8.500	1/20
	1/22	1/22 to 2/22	1/22			5.00 5.00	202 272		0.85 1.00	0.227 0.227	0.193 0.227	0.193 0.227	108 172 FLOW WIDTH/DEPTH 0.494Dp m	108 108	0.00 0.00	399 399	195.3	108	0		5.00 5.00	202 272	0.193 0.227	172			108 [Pipe flow= Grate flow]	44.824	0.67	450(2)	0.68 (1.47)	0.75		Qg 0.108 Qo 0.108 Do 450.000 CHRT 32: Vo2/2gDo 0.05 H/Do Kg side flow 8.53 end flow 6.31	0.024	8.53	0.201			8.53	0.201	0.14	0.064			6.640 6.340	6.719 6.655	6.920		6.920	7.200	1/22
	2/22	2/22 to 3/22	1/22;2/22			5.00 5.00	202 272		0.85 1.00	0.228 0.228	0.194 0.228	0.194 0.228	109 172 FLOW WIDTH/DEPTH 0.497Dp m	109 109	0.00 0.00	399 399	195.3	109	0		5.75 5.75	194 262	0.387 0.455	331			208 [Pipe flow= Sum upstr	44.826 atten flows]	0.67	450(2)	1.31 (1.47)	0.57		Qg 0.105 Qo 0.208 Do 450.000 CHART 33 Angle 0 S/Do 2.5 Du/Do 1.00 Qg/Do 0.50 K 1.52 S/Do 1.92 cor 0.25 Ku 1.77 Kw 1.77	0.087	1.77	0.155			1.77	0.155	0.54	0.240			6.240 5.940	6.500 6.260	6.655		6.655	7.200	2/22
	3/22	3/22 to HW/22	1/22;2/22;3/22			5.00 5.00	202 272		0.85 1.00	0.187 0.187	0.159 0.187	0.159 0.187	89 141 FLOW WIDTH/DEPTH 0.432Dp m	89 89	0.00 0.00	399 399	195.3	89	0		6.32 6.32	188 255	0.546 0.642	455			285 [Pipe flow= Sum upstr	32.756 atten flows]	0.76	450(2)	1.79 (1.56)	0.30		Qg 0.083 Qo 0.285 Do 450.000 Angle 54 Chart 39 S/Do 2.5 chart Du/Do 1.00 K0 1.80 K0.5 1.91 Qu/Qo 0.71 Cg 0.65 K 1.87 S/Do 2.0 K0 1.98 K0.5 2.10 K 2.06 S/Do 1.5 K0 2.39 K0.5 2.52 K 2.47	0.163	1.79	0.293			Interp val for S/Do 1.94 Kw 2.11 CHART 38 S/Do 2.0 K0 1.84 K0.5 1.95 K 1.79 S/Do 1.5 K0 2.05 K0.5 1.84 K 1.91 Interp val for S/Do 1.94 Ku 1.79	2.11	0.345	1.00	0.327			5.890 5.640	5.967 5.640	6.260		6.312	7.200	3/22

PLANS AND DOCUMENTS
referred to in the PDA APPROVAL
23 DEC 2013
VERIFIED

Issue	Description	Author	Date
02	G.C.C.C. R.F.I.	BD	14/11/13
01	ISSUE FOR DPW APPROVAL	BD	14/10/13

Scale

100mm on Original

Surveyor
BENNETT+BENNETT
Property Consultants, Surveyors • Town Planners
All mail to: PO Box 5021, GCMC, Qld 9726
mail@bennettandbennett.com.au
BBH Pty Ltd A.C.N 010 427 551
COOMERA OFFICE
9 Jowett Street
Coomera 4209
Ph (07) 5573 8177
Fax (07) 5573 4342

Architect
ARCHIPELAGO

Filename C2310-C2317-AA005621-SWD CALC.DWG

Client
Queensland Government
DEPARTMENT OF STATE DEVELOPMENT, INFRASTRUCTURE & PLANNING

Status
FOR APPROVAL
NOT FOR CONSTRUCTION
Approved R.E.P.Q. No 8677
Scales
Current Issue Signatures
Author B.DAVEY
Original Size A1
Designer T.DINGLE
Height Datum AHD
Reviewer B.THOMPSON
Grid MGA
© Copyright reserved

Project
GOLD COAST PARKLANDS REDEVELOPMENT
TRUNK INFRASTRUCTURE

Title
STORMWATER CALCULATION TABLES - SHEET 8 OF 8

Hyder
HYDER CONSULTING PTY. LTD
ABN 76 104 485 289
P.O Box 1653
Southport, QLD 4215
Australia
Tel: +61 (07) 5532 3933
Fax: +61 (07) 5591 4778
www.hyderconsulting.com

Drawing No.	Project No.	Issue
C2317	AA005621	02

18/Nov/2013 4:12 PM \\hc-aus-gc-fs-01\Jobs\AA005621\E-CAD\C-Civil\D-Final\C2310-C2317-AA005621-SWD CALC.dwg V1

FOR TYPICAL CHAMBER STRUCTURAL DETAILS REFER DWG C2326

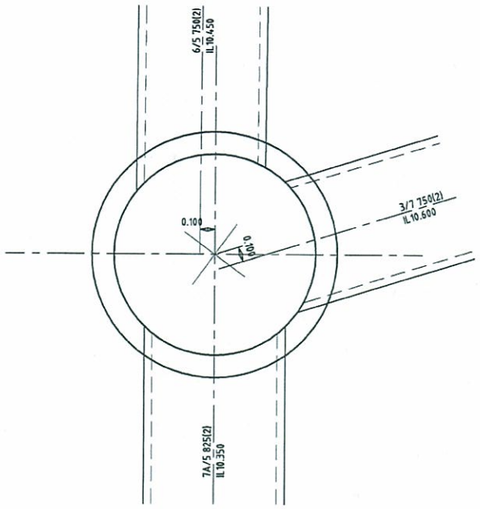

7/5 - 1350 dia SL 12.391

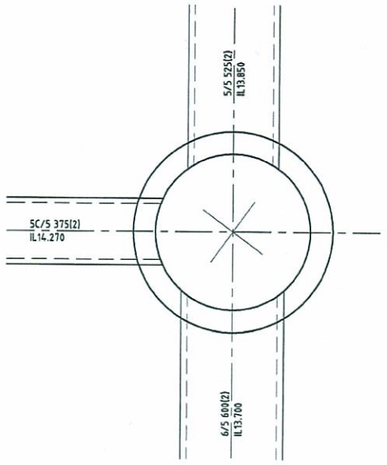

5A/5 - 1050 dia SL 15.469

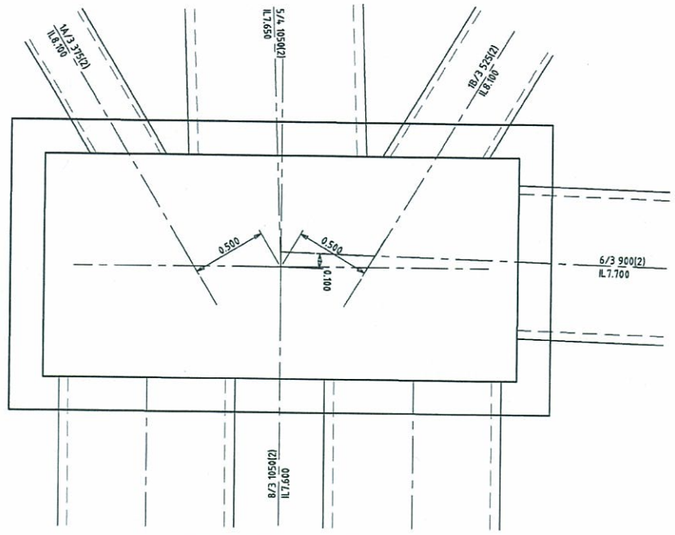

7/3 - 1500 x 3200SL 9.537

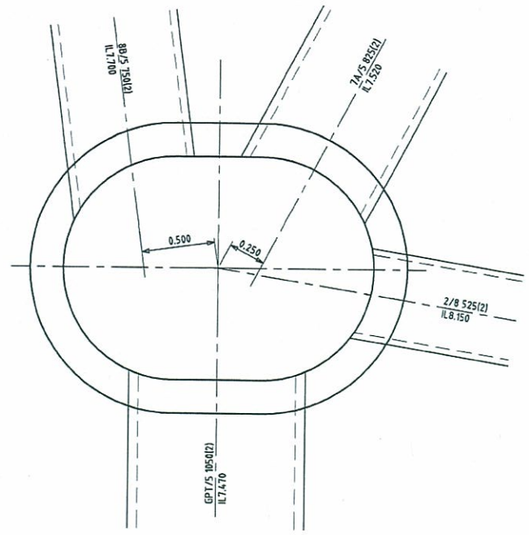

8/5 - 1500 dia EXT 600SL 9.586

PLANS AND DOCUMENTS
referred to in the PDA APPROVAL
23 DEC 2013
MEDQ

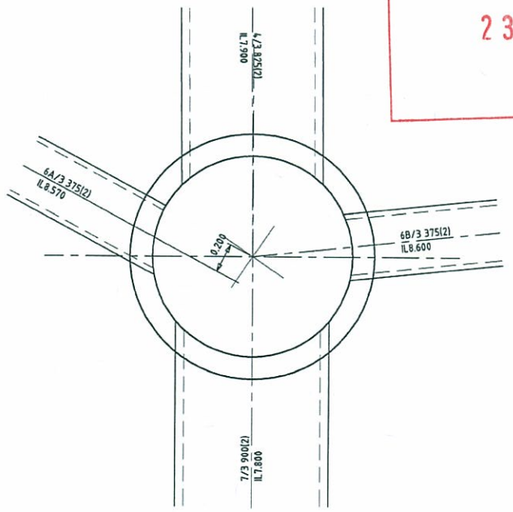

6/3 - 1350 dia SL 9.814

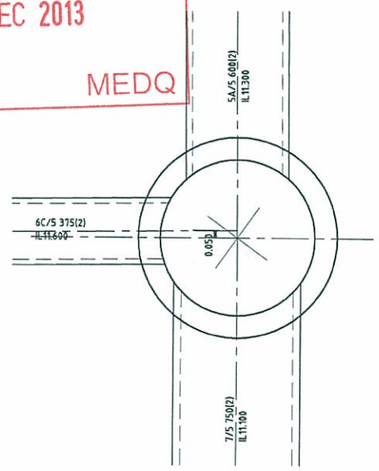

6/5 - 1050 dia SL 13.088

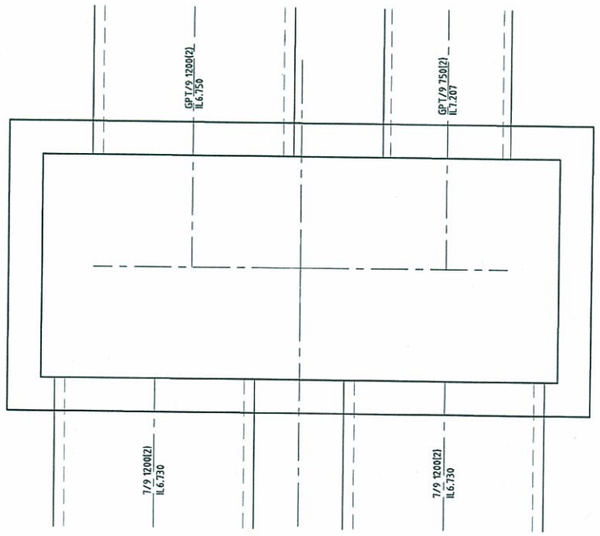

6C/9 - 1500 x 3500SL 9.372

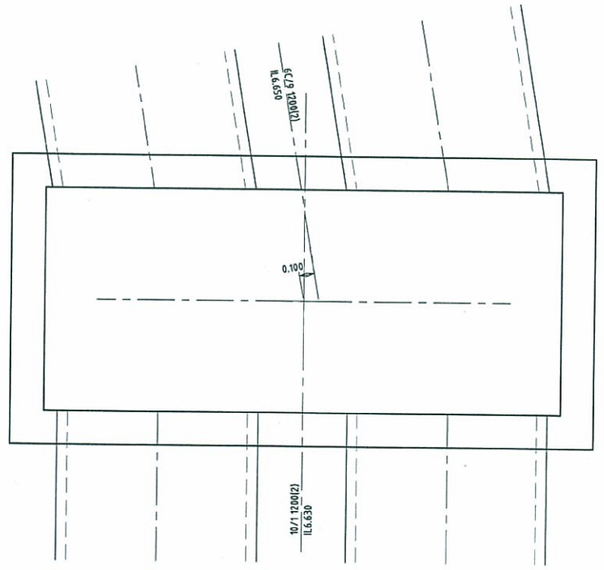

7/9 - 1500 x 3500SL 9.008

Issue	Description	Author	Date
01	ISSUE FOR OPW APPROVAL	BD	14/10/13

100mm on Original

Scale: 0 0.5 1 1.5 2m — 1 : 20

Surveyor: BENNETT + BENNETT
Property Consultants, Surveyors + Town Planners
All mail to: PO Box 5021, GCMC, Qld 9726
mail@bennettandbennett.com.au
BBH Pty. Ltd. A.C.N. 010 421 531
COOMERA OFFICE: 9 Jowett Street, Coomera 4209, Ph (07) 5573 6177, Fax (07) 5529 4342

Architect: ARCHIPELAGO

Filename: C2318-C2325-AA005621-SWD MANHOLE.DWG

Client: Queensland Government
DEPARTMENT OF STATE DEVELOPMENT, INFRASTRUCTURE & PLANNING

Status: FOR APPROVAL
CONSTRUCTION SUBJECT TO COUNCIL APPROVAL
Approved: R.E.P.Q No: 8677

Scales	1:20	Current Issue Signatures	
		Author B.DAVEY	
Original Size	A1	Designer T.DINGLE	
Height Datum	AHD	Reviewer B.THOMPSON	
Grid	MGA	© Copyright reserved	

Project: GOLD COAST PARKLANDS REDEVELOPMENT
TRUNK INFRASTRUCTURE

Title: STORMWATER MANHOLE DETAILS - SHEET 1 OF 5

Hyder
HYDER CONSULTING PTY. LTD
ABN 76 104 485 289
P O Box 1653
Southport, QLD 4215
Australia
Tel: +61 (07) 5532 3933
Fax: +61 (07) 5591 4778
www.hyderconsulting.com

Drawing No.	Project No.	Issue
C2318	AA005621	01

14/Oct/2013 1:36 PM \\hc-aus-gc-fs-01\jobs\AA005621\E-CAD\C-Civil\D-Final\C2318-C2325-AA005621-SWD MANHOLE.dwg V1

FOR TYPICAL CHAMBER STRUCTURAL DETAILS REFER DWG C2326

PLANS AND DOCUMENTS
referred to in the PDA APPROVAL
23 DEC 2013
MEDC

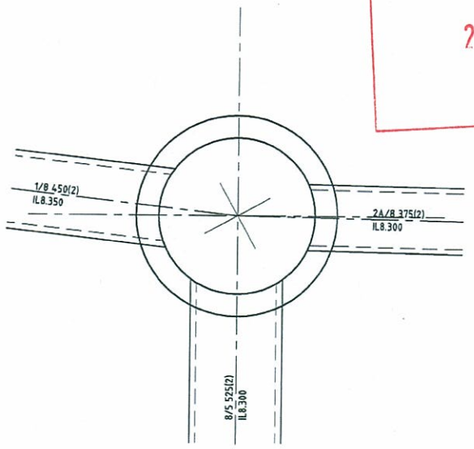

2/8 - 1050 dia SL 9.516

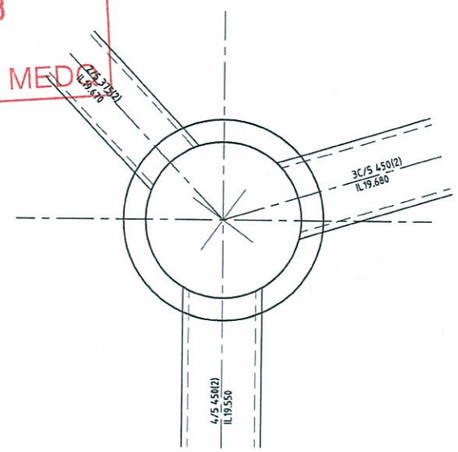

3/5 - 1050 dia SL 21.138

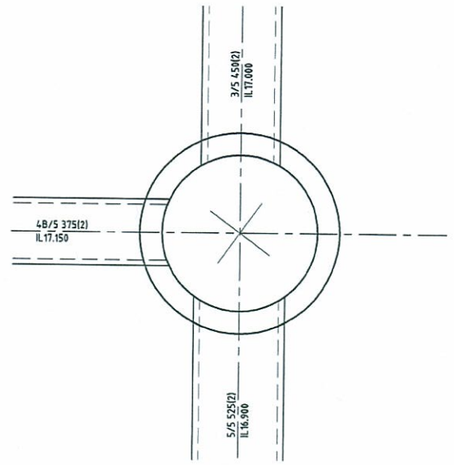

4/5 - 1050 dia SL 18.503

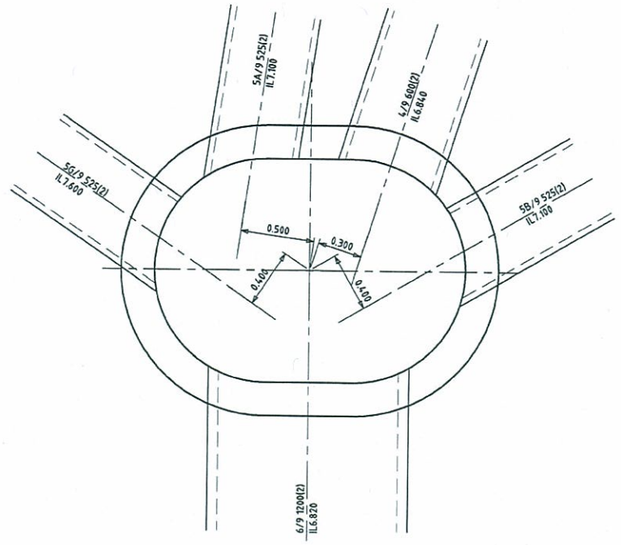

5/9 - 1500 dia EXT 600SL 8.965

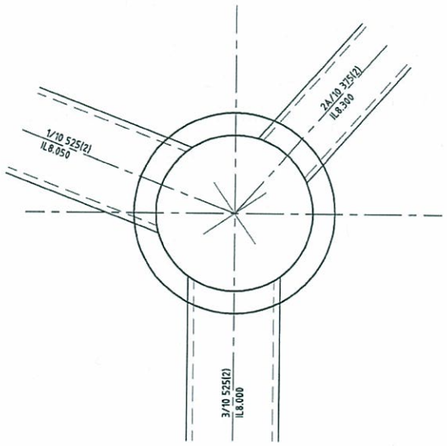

2/10 - 1050 dia SL 9.480

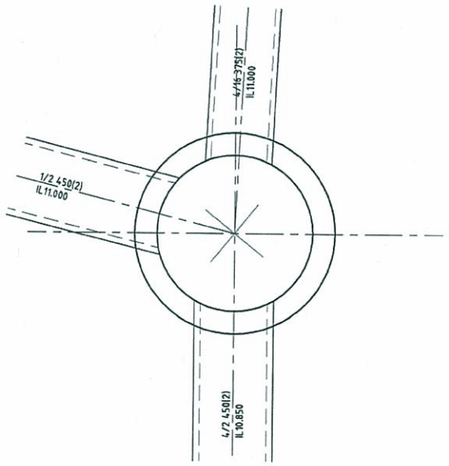

3/2 - 1050 dia SL 12.383

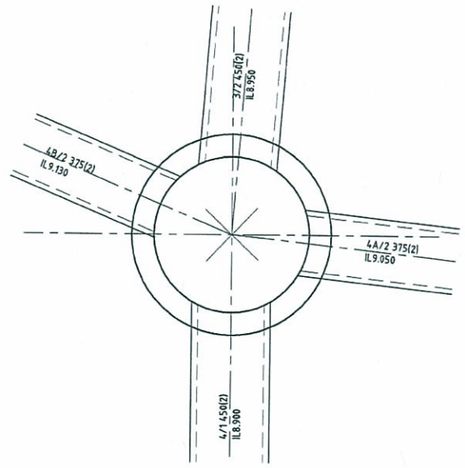

4/2 - 1050 dia SL 10.443

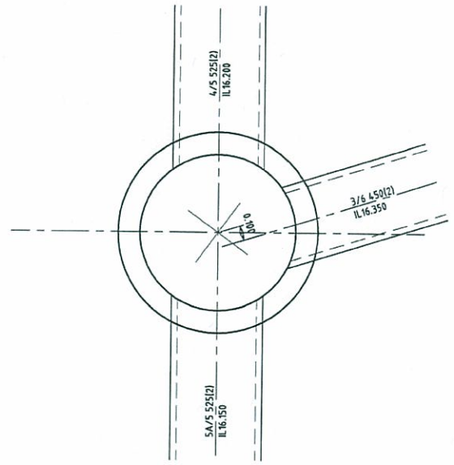

5/5 - 1050 dia SL 17.822

Issue	Description	Author	Date
01	ISSUE FOR OPW APPROVAL	BD	14/10/13

100mm on Original

Scale: 0 0.5 1 1.5 2m — 1 : 20

Surveyor: BENNETT + BENNETT
Property Consultants, Surveyors + Town Planners
All mail to: PO Box 5021, GCMC, Qld 9726
mail@bennettandbennett.com.au
BBH Pty Ltd A.C.N. 010 427 531
COOMERA OFFICE: 9 Jowett Street, Coomera 4209, Ph (07) 5573 6177, Fax (07) 5529 4342

Architect: ARCHIPELAGO

Filename: C2318-C2325-AA005621-SWD MANHOLE.DWG

Client: Queensland Government
DEPARTMENT OF STATE DEVELOPMENT, INFRASTRUCTURE & PLANNING

Status: FOR APPROVAL
CONSTRUCTION SUBJECT TO COUNCIL APPROVAL

Approved: R.E.P.Q. No: 8677

Scales	1:20	Current Issue Signatures	
Original Size	A1	Author B.DAVEY	
Height Datum	AHD	Designer T.DINGLE	
Grid	MGA	Reviewer B.THOMPSON	

© Copyright reserved

Project: GOLD COAST PARKLANDS REDEVELOPMENT
TRUNK INFRASTRUCTURE

Title: STORMWATER MANHOLE DETAILS - SHEET 2 OF 5

Hyder
HYDER CONSULTING PTY. LTD
ABN 76 104 485 289
P O Box 1653
Southport, QLD 4215
Australia
Tel: +61 (07) 5532 3933
Fax: +61 (07) 5591 4778
www.hyderconsulting.com

Drawing No.	Project No.	Issue
C2319	AA005621	01

14/Oct/2013 1:36 PM \\hc-aus-gc-fs-01\jobs\AA005621\E-CAD\C-Civil\D-Final\C2318-C2325-AA005621-SWD MANHOLE.dwg V1

FOR TYPICAL CHAMBER STRUCTURAL DETAILS REFER DWG C2326

PLANS AND DOCUMENTS referred to in the PDA APPROVAL

23 DEC 2013

MEDQ

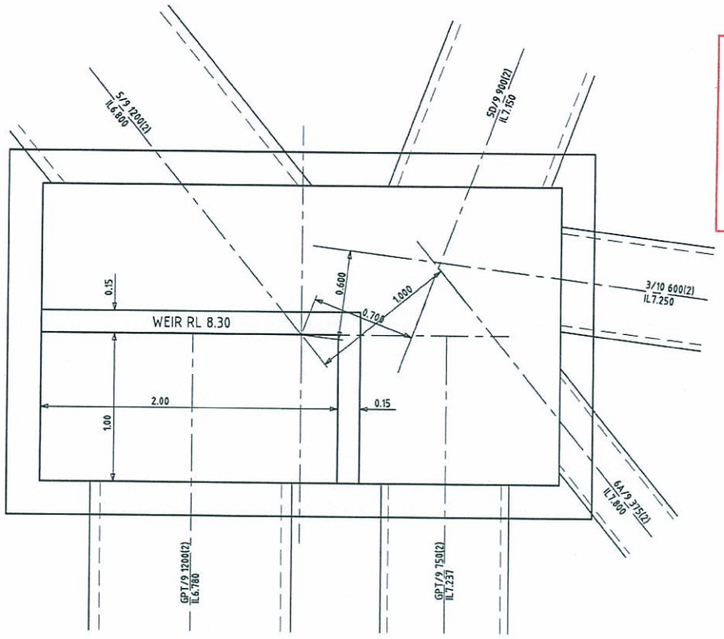

6/9 - 2000 x 3500SL 9.060

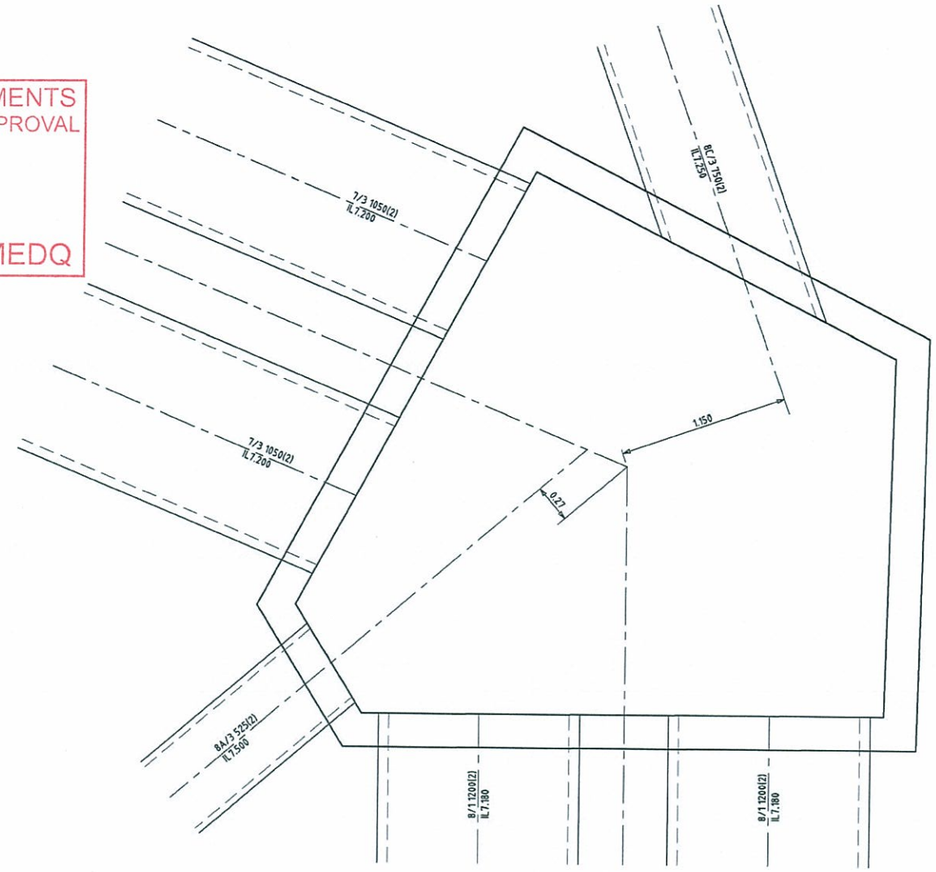

8/3 - 1500 x 4500SL 9.080

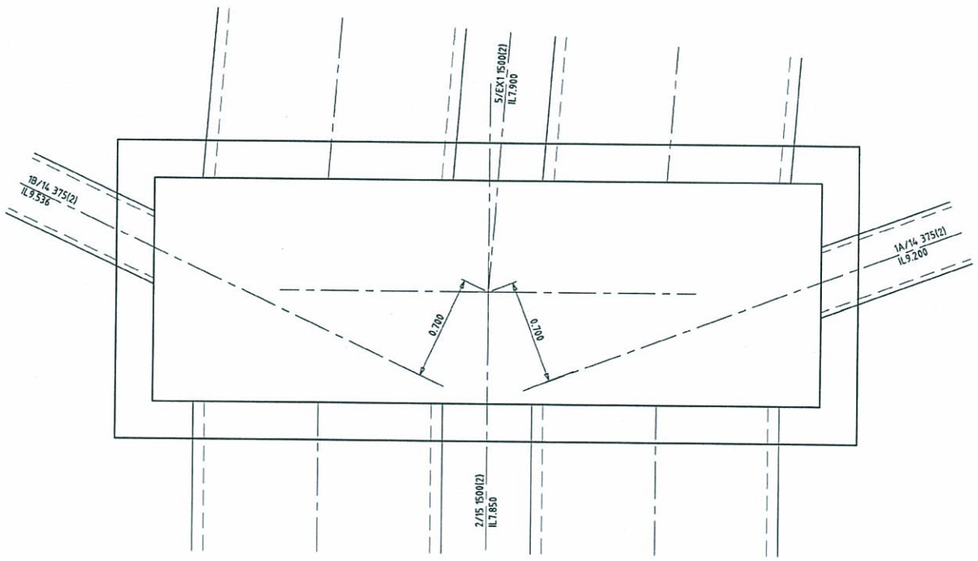

1/14 - 1500 x 4500SL 10.719

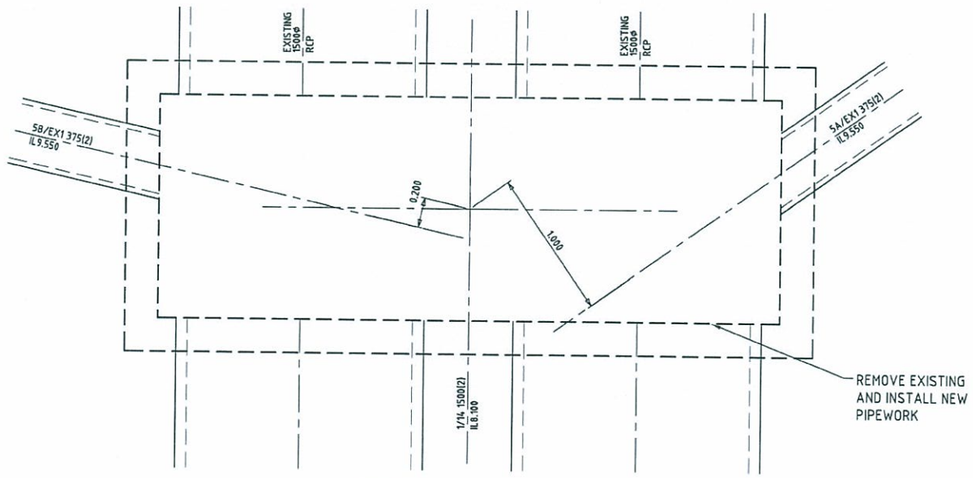

5/EX1 - 1500 x 4200SL 10.813

Issue	Description	Author	Date
01	ISSUE FOR OPW APPROVAL	BD	14/10/13

100mm on Original

Scale: 0 0.5 1 1.5 2m — 1 : 20

Surveyor: BENNETT + BENNETT
Property Consultants, Surveyors + Town Planners
All mail to: PO Box 5021, GCMC., Qld. 9726
mail@bennettandbennett.com.au
BBH Pty. Ltd. A.C.N. 010 427 631
COOMERA OFFICE: 9 Jowett Street, Coomera. 4209. Ph (07) 5573 6177 Fax (07) 5529 4342

Architect: ARCHIPELAGO

Filename: C2318-C2325-AA005621-SWD MANHOLE.DWG

Client: Queensland Government
DEPARTMENT OF STATE DEVELOPMENT, INFRASTRUCTURE & PLANNING

Status: FOR APPROVAL
CONSTRUCTION SUBJECT TO COUNCIL APPROVAL

Approved: R.E.P.Q No: 8677

Scales	1:20	Current Issue Signatures	
Original Size	A1	Author B.DAVEY	
Height Datum	AHD	Designer T.DINGLE	
Grid	MGA	Reviewer B.THOMPSON	

© Copyright reserved

Project: GOLD COAST PARKLANDS REDEVELOPMENT
TRUNK INFRASTRUCTURE

Title: STORMWATER MANHOLE DETAILS - SHEET 3 OF 5

Hyder
HYDER CONSULTING PTY. LTD
ABN 76 104 485 289
P O Box 1653
Southport, QLD 4215
Australia
Tel: +61 (07) 5532 3933
Fax: +61 (07) 5591 4778
www.hyderconsulting.com

Drawing No.	Project No.	Issue
C2320	AA005621	01

14/Oct/2013 1:37 PM \\hc-aus-gc-fs-01\jobs\AA005621\E-CAD\C-Civil\D-Final\C2318-C2325-AA005621-SWD MANHOLE.dwg V1