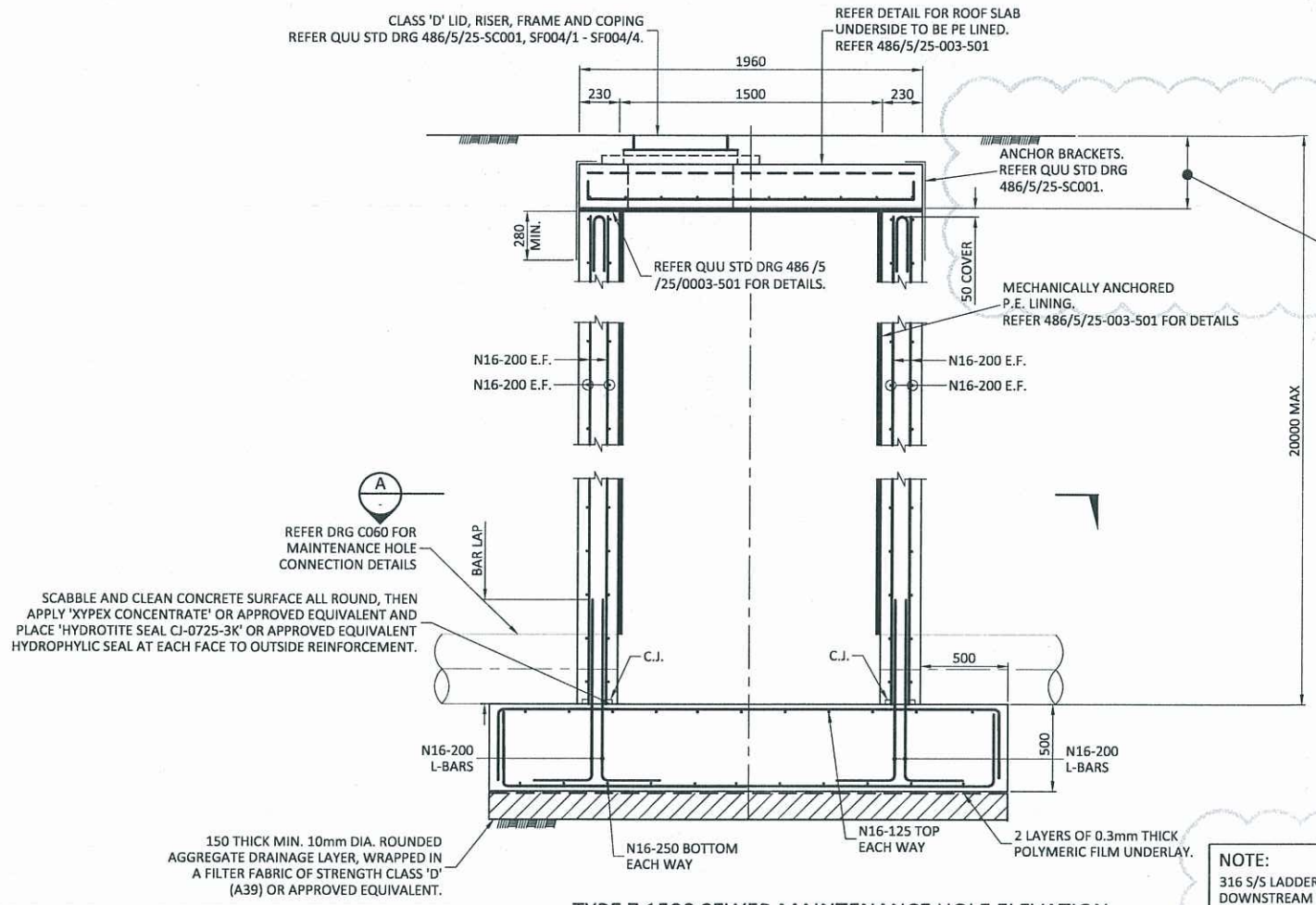

TYPE Z 1500 SEWER MAINTENANCE HOLE ELEVATION
SCALE A

C

350 MAX THROAT DIMENSION.
REFER QUU STD DRG 486/5/25-SC001.
RISER IS TO BE SELECTED TO ENSURE APPROPRIATE THROAT DIMENSION.

C

NOTE:
316 S/S LADDERS TO BE INSTALLED OVER DOWNSTREAM OUTLET OF MAINTENANCE HOLES.
REFER QUU STD DRG 486/5/25-0003-631 & NOTES ON DRG C060.

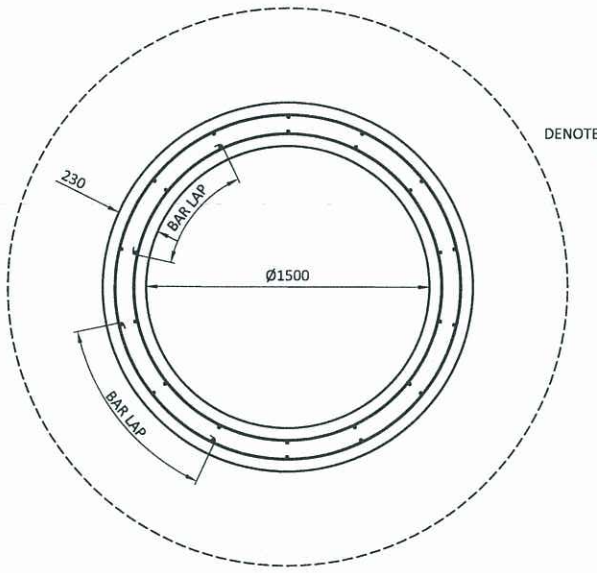

SECTION A
SCALE A

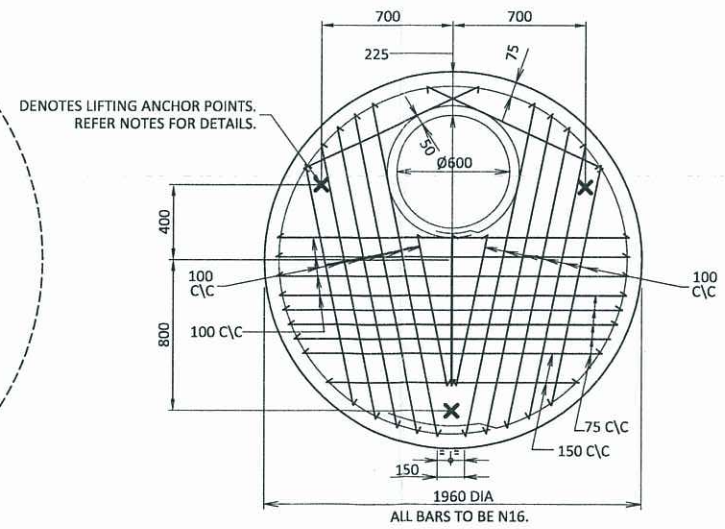

TYPE Z 1500 ROOF SLAB BTM REINFORCING DETAIL
SCALE A
SL102 MESH TOP
200 THICK

NOTE
ROOF SLAB TO BE USED ON ALL TYPE Z 1500 DIA. MAINTENANCE HOLES, EXCEPT MH1/1 .

PLANS AND DOCUMENTS referred to in the ULDA APPROVAL dated 25/5/2012

C

CONSTRUCTION INSPECTION:
NOTIFICATION OF INSPECTIONS MUST BE RECEIVED BY QUEENSLAND URBAN UTILITIES SERVICE DELIVERY EAST - PROJECT WIS AT LEAST TWO (2) WEEKS PRIOR TO COMMENCEMENT OF CONSTRUCTION
PLEASE CONTACT QUU PH: (07) 3407 8494

A "PERMIT TO WORK" MUST BE OBTAINED FROM THE RELEVANT QUU CONTROL ROOM PRIOR TO COMMENCEMENT OF WORK ON SITE. A MINIMUM PERIOD OF TEN WORKING DAYS IS REQUIRED FOR THE ISSUING OF A PERMIT. CONTROL ROOM EAST (BRISBANE LG AREA)
PH: 3407 8391 EMAIL: PTWOE@URBANUTILITIES.COM.AU

DATE:
QUEENSLAND URBAN UTILITIES DELEGATE
(APPROVAL VALID FOR 12 MONTHS FROM DATE SHOWN)

CLIENT: ULDA
CONTACT: BORNHORST & WARD
QUU AUDITOR: AUDIT AND COMPLIANCE OFFICER QUEENSLAND URBAN UTILITIES
CONTACT: (07) 3407 8494

AS CONSTRUCTED DETAILS FOR AMEND.

I CERTIFY THAT THE "AS CONSTRUCTED" DETAILS SHOWN ON THIS PLAN ARE TRUE AND ACCURATE RECORD OF THE WORKS

SIGNED DATE:
NAME of SIGNATORY
RPEQ No. or LICENCE
COMPANY NAME
START DATE FINISH DATE

SHEET No. OF
QUEENSLAND URBAN UTILITIES DRAWING No. 486/5/6-0087-016
AMEND. A

QUEENSLAND UrbanUtilities

PROJECT NORTH

DIMENSIONS IN METRES EXCEPT WHERE SHOWN OTHERWISE. CULVERT AND PIPE SIZES IN MILLIMETRES
A1 UNREDUCED
A3 REDUCED
SCALES UNREDUCED / REDUCED
A 0 0.2 0.4 0.6 0.8 1 m 1:20 / 1:40

STATUS
FOR APPROVAL

COPYRIGHT © - This document is and shall remain the property of Bornhorst & Ward Pty. Ltd. The document may only be used for the purpose for which it was commissioned and in accordance with the terms of engagement. Unauthorised use of this document in any form whatsoever is prohibited.

REV.	DATE	AMENDMENT / ISSUE	DWN	DES	CHK	APP
C	13.03.12	RE-ISSUE TO QUU FOLLOWING COMMENTS				
B	02.03.12	ISSUE TO QUU FOR SCRUTINY	AY	LJ	NR	NR
A	15.12.11	RE-ISSUE TO QUU FOR APPROVAL	AY	LJ	NR	NR

ASSOCIATED CONSULTANTS
SURVEYOR: LANDPARTNERS LIMITED.
GEOTECH: SOIL SURVEYS PTY LTD.

APPROVED: NICK ROZIS 7729 RPEQ — DATE 29/09/2011
CHECKED: N.ROZIS — DATE 29/09/2011

BORNHORST + WARD
CONSULTING ENGINEERS
CIVIL AND STRUCTURAL
Level 4, 67 Astor Terrace, Spring Hill, QLD 4000
Bornhorst & Ward Pty Ltd
Brisbane Australia
Phone (07) 3013 4699
Facsimile (07) 3013 4611
mail@bornhorstward.com.au
www.bornhorstward.com.au
A.C.N. 010 151 354 A.B.N. 78 010 151 354

CLIENT: URBAN LAND DEVELOPMENT AUTHORITY
PROJECT: NORTHSHORE HAMILTON TRUNK SEWER, MACARTHUR AVE TO KINGSFORD SMITH DRIVE
SUBJECT: TYPE Z 1500 (SPECIAL) MAINTENANCE HOLE DETAILS
PROJECT No. 10470
DRAWING No. C081
REVISION C

PLANS AND DOCUMENTS
referred to in the ULDA
APPROVAL dated 25 / 5 /2012

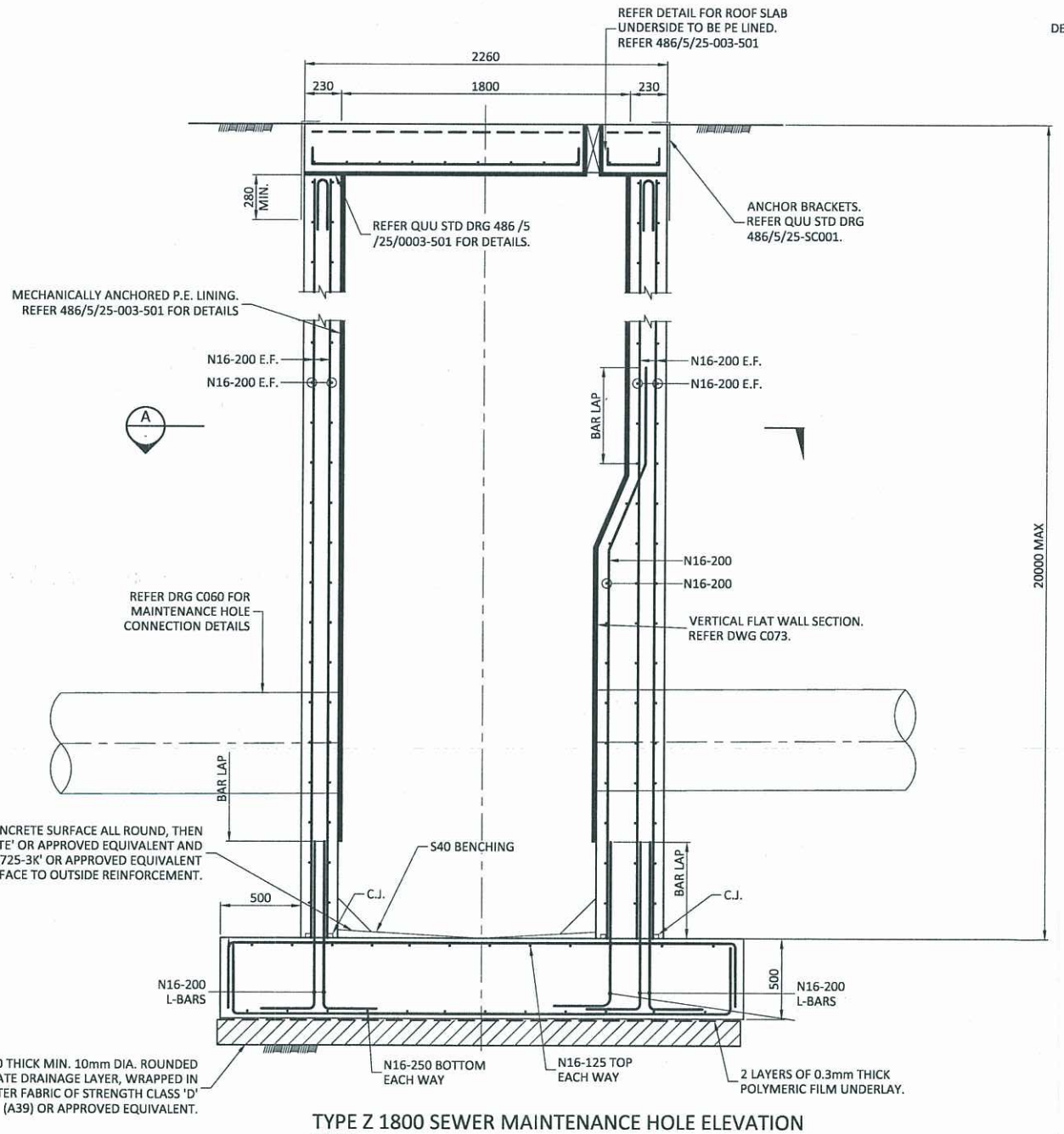

TYPE Z 1800 SEWER MAINTENANCE HOLE ELEVATION
SCALE A

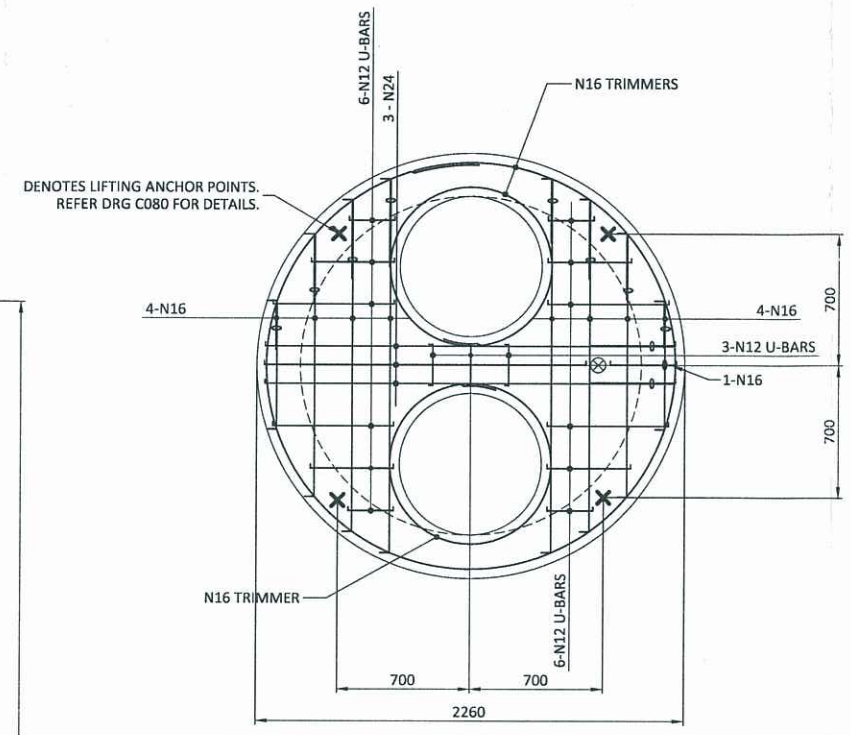

TYPE Z 1800 ROOF SLAB BTM REINFORCING DETAIL
SCALE A
SL102 MESH TOP
300 THICK

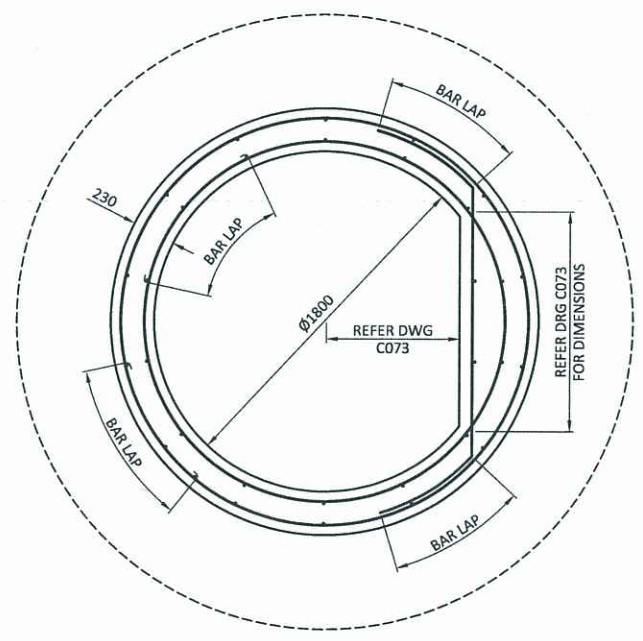

SECTION A
SCALE A

C

CONSTRUCTION INSPECTION:
NOTIFICATION OF INSPECTIONS MUST BE RECEIVED BY QUEENSLAND URBAN UTILITIES SERVICE DELIVERY EAST - PROJECT WIS AT LEAST TWO (2) WEEKS PRIOR TO COMMENCEMENT OF CONSTRUCTION
PLEASE CONTACT QUU PH: (07) 3407 8494

A "PERMIT TO WORK" MUST BE OBTAINED FROM THE RELEVANT QUU CONTROL ROOM PRIOR TO COMMENCEMENT OF WORK ON SITE. A MINIMUM PERIOD OF TEN WORKING DAYS IS REQUIRED FOR THE ISSUING OF A PERMIT. CONTROL ROOM EAST (BRISBANE LG AREA)
PH: 3407 8391 EMAIL: PTWOE@URBANUTILITIES.COM.AU

DATE:
QUEENSLAND URBAN UTILITIES DELEGATE
(APPROVAL VALID FOR 12 MONTHS FROM DATE SHOWN)

CLIENT	ULDA
CONTACT:	BORNHORST & WARD
QUU AUDITOR:	AUDIT AND COMPLIANCE OFFICER QUEENSLAND URBAN UTILITIES
CONTACT:	(07) 3407 8494

AS CONSTRUCTED DETAILS FOR AMEND.

I CERTIFY THAT THE "AS CONSTRUCTED" DETAILS SHOWN ON THIS PLAN ARE TRUE AND ACCURATE RECORD OF THE WORKS

SIGNED DATE:
NAME of SIGNATORY
RPEQ No. or LICENCE
COMPANY NAME
START DATE FINISH DATE

SHEET No. OF

QUEENSLAND URBAN UTILITIES DRAWING No. 486/5/6-0087-017 — AMEND. A

QUEENSLAND UrbanUtilities

PROJECT NORTH

DIMENSIONS IN METRES EXCEPT WHERE SHOWN OTHERWISE. CULVERT AND PIPE SIZES IN MILLIMETRES — A1 UNREDUCED, A3 REDUCED

SCALES — UNREDUCED / REDUCED
A 0 0.2 0.4 0.6 0.8 1 m 1:20 / 1:40

STATUS
FOR APPROVAL

COPYRIGHT © - This document is and shall remain the property of Bornhorst & Ward Pty. Ltd. The document may only be used for the purpose for which it was commissioned and in accordance with the terms of engagement. Unauthorised use of this document in any form whatsoever is prohibited.

REV.	DATE	AMENDMENT / ISSUE	DWN	DES	CHK	APP
C	13.03.12	RE-ISSUE TO QUU FOLLOWING COMMENTS				
B	02.03.12	ISSUE TO QUU FOR SCRUTINY	AY	LJ	NR	NR
A	15.12.11	RE-ISSUE TO QUU FOR APPROVAL	AY	LJ	NR	NR

ASSOCIATED CONSULTANTS
SURVEYOR: LANDPARTNERS LIMITED.
GEOTECH: SOIL SURVEYS PTY LTD.

APPROVED: NICK ROZIS 7729 RPEQ — DATE 29/09/2011
CHECKED: N.ROZIS — DATE 29/09/2011

BORNHORST + WARD
CONSULTING ENGINEERS
CIVIL AND STRUCTURAL
Level 4, 67 Astor Terrace, Spring Hill, QLD 4000
Bornhorst & Ward Pty Ltd
Brisbane Australia
Phone (07) 3013 4699
Facsimile (07) 3013 4611
mail@bornhorstward.com.au
www.bornhorstward.com.au
A.C.N. 010 151 354 A.B.N. 78 010 151 354

CLIENT: URBAN LAND DEVELOPMENT AUTHORITY

PROJECT: NORTHSHORE HAMILTON TRUNK SEWER, MACARTHUR AVE TO KINGSFORD SMITH DRIVE

SUBJECT: TYPE Z 1800 (SPECIAL) MAINTENANCE HOLE DETAILS

PROJECT No. 10470
DRAWING No. C082 REVISION C

PIPE CAPACITY AT GRADE CALCULATIONS (70% DOF)

PIPE SIZE	ID (mm)	FLOW AREA AT 70% DOF	WETTED PERIMETER AT 70% DOF	HYDRAULIC RADIUS (R)	PIPE DESIGN GRADE	n	Q (l/s)
315 PE (PN10)	277	0.0451	0.549	0.082	1:71.33	0.0128	78.70 L/S
500 VC	500	0.1468	0.991	0.148	1:200	0.013	223.5 L/S
600 VC	600	0.2114	1.189	0.178	1:200	0.013	363.5 L/S
630 PE (PN12.5)	535	0.1681	1.061	0.158	1:15.50	0.0128	976.8 L/S

PIPE CAPACITY AT GRADE CALCULATIONS (70% DOF) (MACARTHUR AVE)

PIPE SIZE	ID (mm)	FLOW AREA AT 70% DOF	WETTED PERIMETER AT 70% DOF	HYDRAULIC RADIUS (R)	PIPE DESIGN GRADE	n	Q (l/s)
225 CUR	225	0.040	0.446	0.067	1:143	0.013	31.40 L/S
225 CUR	225	0.040	0.446	0.067	1:150	0.013	30.70 L/S
						TOTAL	62.1 L/S

E

MH 1/1 TO MH 150190 FLOW VELOCITY CALCULATION

PWWF = 314 l/s (REFER DRG C090)

PIPE SIZE = 630 PE PN12.5 (ID = 0.535m)
TRIAL DEPTH OF FLOW = 0.194m

FLOW CALCULATION AT 0.194m DEPTH OF FLOW

- A (FLOW AREA AT 0.194m) = 0.0736m2
- P (WETTED PERIMETER) = 0.6915m
- R (HYDRAULIC RADIUS A/P) = 0.106
- S (GRADE) = 1:16.31
- n (MANNING'S ROUGHNESS COEFFICIENT) = 0.0128

Q = 1/n x AR^⅔ x S^½
Q = 0.319 m3/s (OK - PWWF = 0.314 m3/s)

Q = AV
0.319 = 0.0736 x V
V = 4.33 m/s

PIPE VELOCITY OF PWWF IN PIPE = 4.33 m/s

LEGEND

EXISTING	PROPOSED	
		KERB AND CHANNEL
		KERB ONLY
		KERB INVERT
		EDGE OF BITUMEN
		EXTENT OF BUILDING
		PROPERTY BOUNDARY
		EASEMENT
		STORMWATER DRAINAGE
TOP OF BATTER / TOE OF BATTER		BATTER
		CATCHMENT BOUNDARY
		SEWER MANHOLE
		SEWER MANHOLE NUMBER

PLANS AND DOCUMENTS referred to in the ULDA APPROVAL dated 25 / 5 /2012

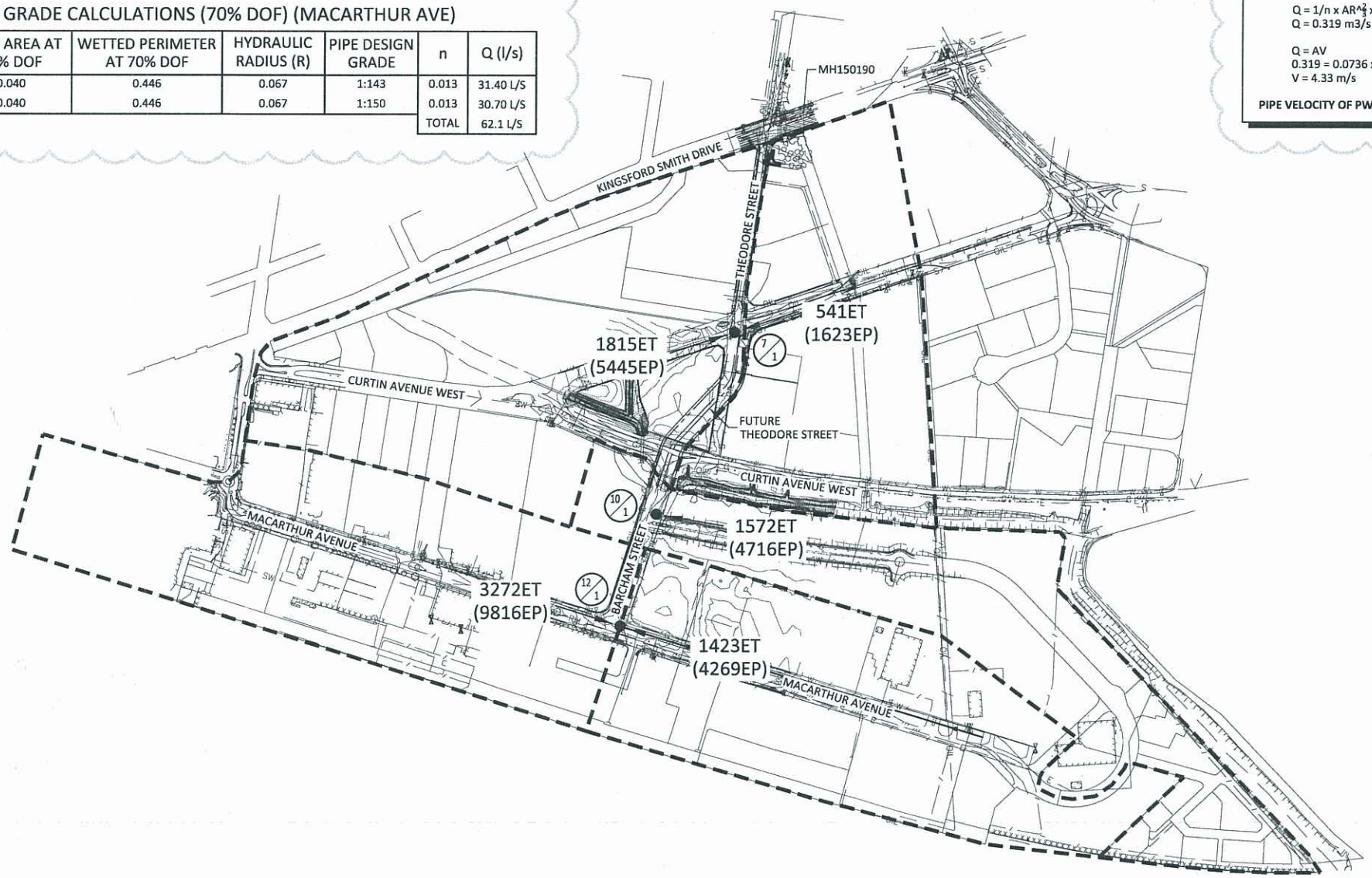

PLAN
SCALE A

DESIGN FLOW CALCULATIONS

MH	ET	EP (3EP/ET)	NU SEWER (PE)			CONVENTIONAL (VC)	
			'd'	DESIGN FLOW (L/S)	PIPE SIZE AT DESIGN GRADE	PWWF 1050 L/EP/d	PIPE SIZE AT DESIGN GRADE
12/1	4695	14085	2.140	116 L/S	DN500 PE	171 L/S	Ø500
10/1	6267	18801	2.029	152 L/S	DN500 PE	228 L/S	Ø600
7/1	8623	25869	1.980	206 L/S	DN630 PE	314 L/S	Ø600

NOTE
EP CALCULATIONS AND CATCHMENT BOUNDARIES BASED ON THE NORTHSHORE HAMILTON ULDA - WASTEWATER SERVICING STRATEGY CONCEPT DESIGN FIGURE 2: ET DISTRIBUTION AND GROWTH SCENARIO. PREPARED BY PARSONS BRINCKERHOFF DATED MARCH 2011

NOTE:
PIPE SIZES BASED ON VC JACKING PIPE SIZES.

E

CONSTRUCTION INSPECTION:
NOTIFICATION OF INSPECTIONS MUST BE RECEIVED BY QUEENSLAND URBAN UTILITIES SERVICE DELIVERY EAST - PROJECT WIS AT LEAST TWO (2) WEEKS PRIOR TO COMMENCEMENT OF CONSTRUCTION
PLEASE CONTACT QUU PH: (07) 3407 8494

A "PERMIT TO WORK" MUST BE OBTAINED FROM THE RELEVANT QUU CONTROL ROOM PRIOR TO COMMENCEMENT OF WORK ON SITE. A MINIMUM PERIOD OF TEN WORKING DAYS IS REQUIRED FOR THE ISSUING OF A PERMIT. CONTROL ROOM EAST (BRISBANE LG AREA)
PH: 3407 8391 EMAIL: PTWOE@URBANUTILITIES.COM.AU

DATE:
QUEENSLAND URBAN UTILITIES DELEGATE
(APPROVAL VALID FOR 12 MONTHS FROM DATE SHOWN)

CLIENT	ULDA
CONTACT:	BORNHORST & WARD
QUU AUDITOR:	AUDIT AND COMPLIANCE OFFICER QUEENSLAND URBAN UTILITIES
CONTACT:	(07) 3407 8494

AS CONSTRUCTED DETAILS FOR AMEND.

I CERTIFY THAT THE "AS CONSTRUCTED" DETAILS SHOWN ON THIS PLAN ARE TRUE AND ACCURATE RECORD OF THE WORKS

SIGNED DATE:
NAME of SIGNATORY
RPEQ No. or LICENCE
COMPANY NAME
START DATE FINISH DATE

SHEET No. OF
QUEENSLAND URBAN UTILITIES DRAWING No. 486/5/6-0087-018
AMEND. A

QUEENSLAND UrbanUtilities

PROJECT NORTH

DIMENSIONS IN METRES EXCEPT WHERE SHOWN OTHERWISE. CULVERT AND PIPE SIZES IN MILLIMETRES
A1 UNREDUCED
A3 REDUCED
SCALES UNREDUCED / REDUCED
A 0 50 100 150 200 250m 1 : 5000 / 1 : 10000

STATUS
FOR APPROVAL

COPYRIGHT © - This document is and shall remain the property of Bornhorst & Ward Pty. Ltd. The document may only be used for the purpose for which it was commissioned and in accordance with the terms of engagement. Unauthorised use of this document in any form whatsoever is prohibited.

REV.	DATE	AMENDMENT / ISSUE	DWN	DES	CHK	APP
E	13.03.12	RE-ISSUE TO QUU FOLLOWING COMMENTS				
D	02.03.12	ISSUE TO QUU FOR SCRUTINY	AY	KR	NR	NR
C	15.12.11	RE-ISSUE TO QUU FOR APPROVAL	AY	KR	NR	NR
B	07.10.11	ISSUE FOR TENDER	LRA	KR	NR	NR
A	29.09.11	ISSUE TO QUU FOR SCRUTINY	LRA	KR	NR	NR

ASSOCIATED CONSULTANTS
SURVEYOR: LANDPARTNERS LIMITED.
GEOTECH: SOIL SURVEYS PTY LTD.

APPROVED NICK ROZIS 7729 RPEQ DATE 29/09/2011
CHECKED N.ROZIS DATE 29/09/2011

BORNHORST + WARD CONSULTING ENGINEERS
CIVIL AND STRUCTURAL
Level 4, 67 Astor Terrace, Spring Hill, QLD 4000
Bornhorst & Ward Pty Ltd
Brisbane Australia
Phone (07) 3013 4699
Facsimile (07) 3013 4611
mail@bornhorstward.com.au
www.bornhorstward.com.au
A.C.N. 010 151 354 A.B.N. 78 010 151 354

CLIENT URBAN LAND DEVELOPMENT AUTHORITY
PROJECT NORTHSHORE HAMILTON TRUNK SEWER, MACARTHUR AVE TO KINGSFORD SMITH DRIVE
SUBJECT SEWER CATCHMENT PLAN
PROJECT No. 10470
DRAWING No. C090 REVISION E

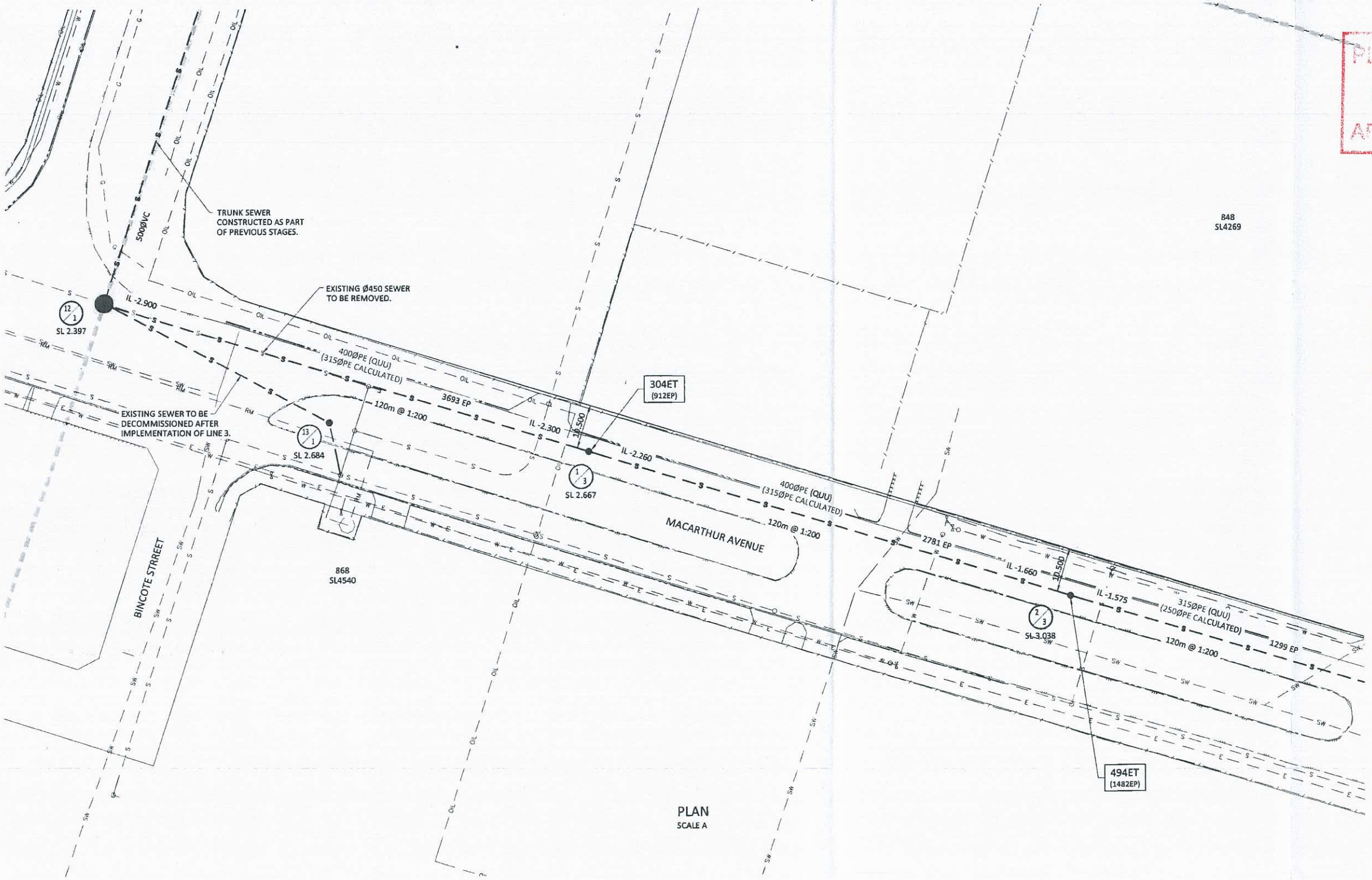

PLAN
SCALE A

LEGEND

EXISTING	PROPOSED	
		KERB AND CHANNEL
		KERB ONLY
		KERB INVERT
		EDGE OF BITUMEN
		EXTENT OF BUILDING
		PROPERTY BOUNDARY
		EASEMENT
SW		STORMWATER DRAINAGE
TOP OF BATTER / TOE OF BATTER		BATTER
S	S	SEWER
		CATCHMENT BOUNDARY
		SEWER MANHOLE
10		SEWER MANHOLE NUMBER

PLANS AND DOCUMENTS referred to in the ULDA APPROVAL dated 25/5/2012

PLANS AND DOCUMENTS referred to in the ULDA APPROVAL dated / /

DATE:
QUEENSLAND URBAN UTILITIES DELEGATE
(APPROVAL VALID FOR 12 MONTHS FROM DATE SHOWN)

CLIENT: ULDA
CONTACT: BORNHORST & WARD
QUU AUDITOR: AUDIT AND COMPLIANCE OFFICER QUEENSLAND URBAN UTILITIES
CONTACT:

AS CONSTRUCTED DETAILS FOR AMEND.

I CERTIFY THAT THE "AS CONSTRUCTED" DETAILS SHOWN ON THIS PLAN ARE TRUE AND ACCURATE RECORD OF THE WORKS

SIGNED DATE:
NAME of SIGNATORY
RPEQ No. or LICENCE
COMPANY NAME
START DATE FINISH DATE

SHEET No. OF
QUEENSLAND URBAN UTILITIES DRAWING No. AMEND.

QUEENSLAND UrbanUtilities

PROJECT NORTH

DIMENSIONS IN METRES EXCEPT WHERE SHOWN OTHERWISE. CULVERT AND PIPE SIZES IN MILLIMETRES
A1 UNREDUCED
A3 REDUCED

SCALES
UNREDUCED / REDUCED
A 0 5 10 15 20 25m 1 : 500 / 1 : 1000

NOTE
EP CALCULATIONS AND CATCHMENT BOUNDARIES BASED ON THE NORTHSHORE HAMILTON ULDA - WASTEWATER SERVICING STRATEGY CONCEPT DESIGN FIGURE 2: ET DISTRIBUTION AND GROWTH SCENARIO. PREPARED BY PARSONS BRINCKERHOFF DATED MARCH 2011

STATUS
FOR APPROVAL

COPYRIGHT © - This document is and shall remain the property of Bornhorst & Ward Pty. Ltd. The document may only be used for the purpose for which it was commissioned and in accordance with the terms of engagement. Unauthorised use of this document in any form whatsoever is prohibited.

REV.	DATE	AMENDMENT / ISSUE	DWN	DES	CHK	APP
A	09.01.12	ISSUE TO QUU FOR SCRUTINY				

ASSOCIATED CONSULTANTS
SURVEYOR: LANDPARTNERS LIMITED.
GEOTECH: SOIL SURVEYS PTY LTD.

APPROVED: NICK ROZIS 7729 RPEQ — DATE 29/09/2011
CHECKED: N.ROZIS — DATE 29/09/2011

BORNHORST + WARD
CONSULTING ENGINEERS
CIVIL AND STRUCTURAL
Level 4, 67 Astor Terrace, Spring Hill, QLD 4000
Bornhorst & Ward Pty Ltd
Brisbane Australia
Phone (07) 3013 4699
Facsimile (07) 3013 4611
mail@bornhorstward.com.au
www.bornhorstward.com.au

CLIENT: URBAN LAND DEVELOPMENT AUTHORITY

PROJECT: NORTHSHORE HAMILTON SEWER INFRASTRUCTURE

SUBJECT: CONCEPT SERVICING PLAN PRECINCTS 5, 8 & 9 SHEET 1 OF 2

PROJECT No. 10470
DRAWING No. C091 REVISION A

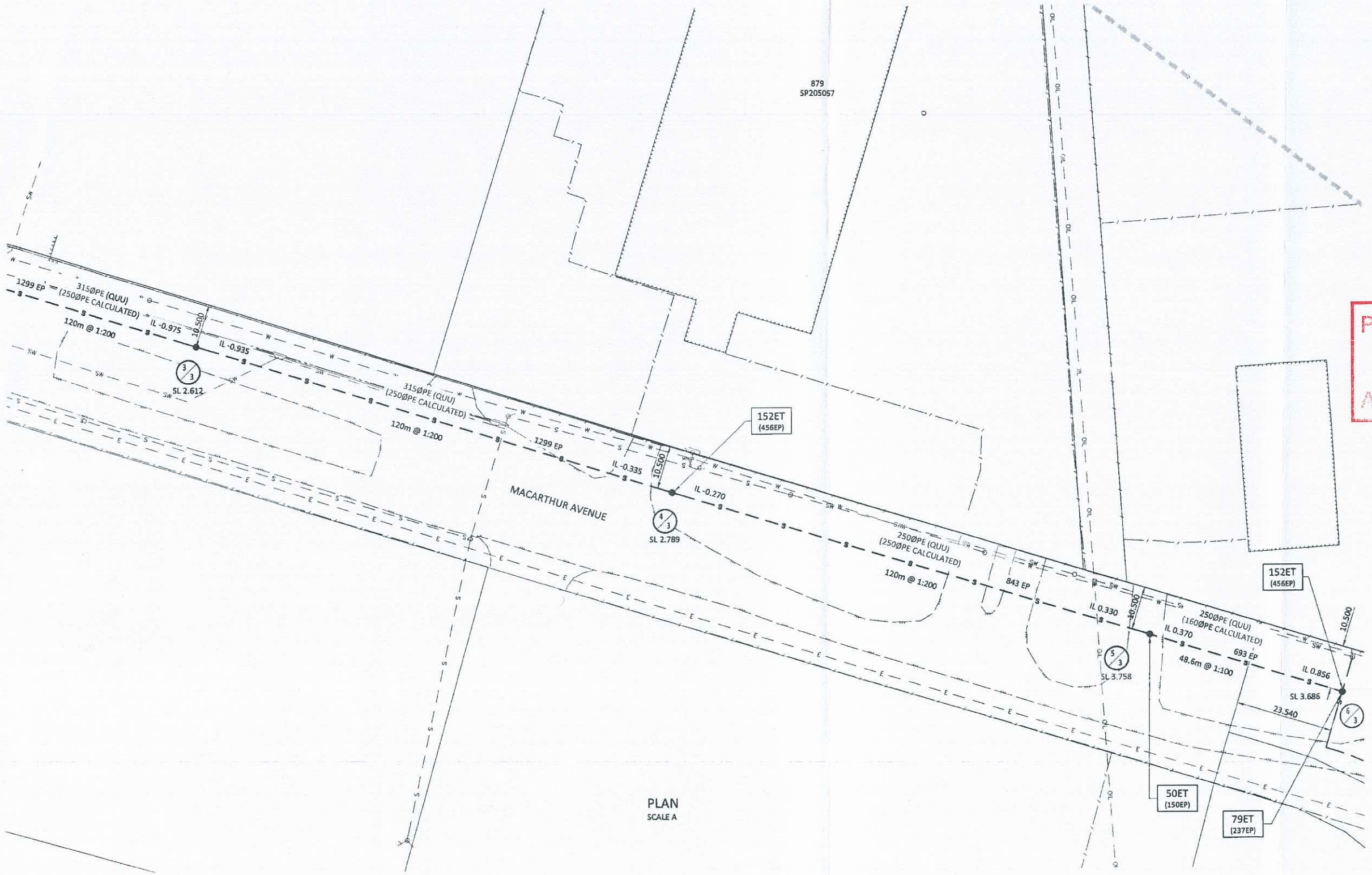

PLAN
SCALE A

LEGEND

EXISTING	PROPOSED	
		KERB AND CHANNEL
		KERB ONLY
		KERB INVERT
		EDGE OF BITUMEN
		EXTENT OF BUILDING
		PROPERTY BOUNDARY
		EASEMENT
SW		STORMWATER DRAINAGE
TOP OF BATTER / TOE OF BATTER		BATTER
S	S	SEWER
		CATCHMENT BOUNDARY
		SEWER MANHOLE
		SEWER MANHOLE NUMBER

PLANS AND DOCUMENTS referred to in the ULDA APPROVAL dated 25 / 5 / 2012

DATE:
QUEENSLAND URBAN UTILITIES DELEGATE
(APPROVAL VALID FOR 12 MONTHS FROM DATE SHOWN)

CLIENT: ULDA
CONTACT: BORNHORST & WARD
QUU AUDITOR: AUDIT AND COMPLIANCE OFFICER QUEENSLAND URBAN UTILITIES
CONTACT:

AS CONSTRUCTED DETAILS FOR AMEND.

I CERTIFY THAT THE "AS CONSTRUCTED" DETAILS SHOWN ON THIS PLAN ARE TRUE AND ACCURATE RECORD OF THE WORKS

SIGNED DATE:
NAME of SIGNATORY
RPEQ No. or LICENCE
COMPANY NAME
START DATE FINISH DATE

SHEET No. OF
QUEENSLAND URBAN UTILITIES DRAWING No. AMEND.

QUEENSLAND UrbanUtilities

PROJECT NORTH

DIMENSIONS IN METRES EXCEPT WHERE SHOWN OTHERWISE. CULVERT AND PIPE SIZES IN MILLIMETRES — A1 UNREDUCED, A3 REDUCED

SCALES — UNREDUCED / REDUCED
A 0 5 10 15 20 25m 1 : 500 / 1 : 1000

NOTE
EP CALCULATIONS AND CATCHMENT BOUNDARIES BASED ON THE NORTHSHORE HAMILTON ULDA - WASTEWATER SERVICING STRATEGY CONCEPT DESIGN FIGURE 2: ET DISTRIBUTION AND GROWTH SCENARIO. PREPARED BY PARSONS BRINCKERHOFF DATED MARCH 2011

STATUS
FOR APPROVAL

COPYRIGHT © - This document is and shall remain the property of Bornhorst & Ward Pty. Ltd. The document may only be used for the purpose for which it was commissioned and in accordance with the terms of engagement. Unauthorised use of this document in any form whatsoever is prohibited.

REV.	DATE	AMENDMENT / ISSUE	DWN	DES	CHK	APP
A	09.01.12	ISSUE TO QUU FOR SCRUTINY				

ASSOCIATED CONSULTANTS
SURVEYOR: LANDPARTNERS LIMITED.
GEOTECH: SOIL SURVEYS PTY LTD.

APPROVED: NICK ROZIS 7729 RPEQ — DATE 29/09/2011
CHECKED: N.ROZIS — DATE 29/09/2011

BORNHORST + WARD
CONSULTING ENGINEERS
CIVIL AND STRUCTURAL
Level 4, 67 Astor Terrace, Spring Hill, QLD 4000
Bornhorst & Ward Pty Ltd
Brisbane Australia
Phone (07) 3013 4699
Facsimile (07) 3013 4611
mail@bornhorstward.com.au
www.bornhorstward.com.au
A.C.N. 010 151 354 A.B.N. 78 010 151 354

CLIENT: URBAN LAND DEVELOPMENT AUTHORITY
PROJECT: NORTHSHORE HAMILTON SEWER INFRASTRUCTURE
SUBJECT: CONCEPT SERVICING PLAN PRECINCTS 5, 8 & 9 SHEET 2 OF 2
PROJECT No. 10470
DRAWING No. C092 REVISION A

A1