LEGEND:

EXISTING

EX 50.0	EXISTING LEVEL
50.0	EXISTING CONTOUR UNO
	EXISTING STORMWATER PIT
	EXISTING STORMWATER DRAINAGE

LEGEND:

PROPOSED

50.0	FINISHED PAVEMENT CONTOUR
50.0	FINISHED PAVEMENT LEVEL
	FINISHED PAVEMENT FALL
SF	INTEGRAL KERB 'SF' PROFILE
IK	INTEGRAL KERB
FK	FLUSH KERB
HMK	HIT & MISS KERB
KG	KERB & GUTTER
RKG	REVERSE FALL KERB & GUTTER
ROLLKG	ROLLOVER KERB & GUTTER
DD	DISH DRAIN
C	PIT TAG
	INLET PIT
	INLET PIT
	SEWER QUALITY PVC OR RCP STORMWATER/RAINWATER DRAINAGE
3	LINE TAG
DP	DOWNPIPE
IO	150 DIA PVC INSPECTION OPENING & RISER CAPPED AT GROUND LEVEL AND MARKED SW. COVER & SURROUND SHALL BE BRASS WHERE IO IS LOCATED IN PAVEMENT.
AG AG	100 DIA. AGRICULTURAL DRAINAGE
	Ø50 SUCTION LINE
	100 DIA. PVC CONDUIT CAPPED FOR FUTURE IRRIGATION

GENERAL NOTES:

1. SITE PLANS SHALL BE READ IN CONJUNCTION WITH ARCHITECTURAL SITE SETOUT.

PLANS AND DOCUMENTS referred to in the PDA DEVELOPMENT APPROVAL

Approval no: DEV2019/1017

Date: 28 June 2019

Queensland Government

ISSUE	AMENDMENT	DATE	INT
A	DA ISSUE	15.02.2019	JK

NOTES.

1. DO NOT SCALE THIS DRAWING.
2. THE DRAWING SHOWS DESIGN INTENT ONLY. ALL DIMENSIONS TO BE CHECKED ON SITE PRIOR TO CONSTRUCTION OR PRODUCTION. CONSTRUCTION DETAILS TO BE CONFIRMED BY CONTRACTOR /MANUFACTURER.
3. THIS IS A COMPUTER GENERATED DRAWING . DO NOT AMEND BY HAND.
4. FIGURE DIMENSIONS ARE TO BE USED. CONTACT ARCHITECT FOR CLARIFICATION IF DIMENSIONS ARE NOT CLEAR.
5. ALL DISCREPANCIES AND OMISSIONS ON SITE MUST BE REPORTED TO THE ARCHITECT FOR THEIR COMMENTS OR APPROVAL PRIOR TO COMMENCING WORK.
6. ALL DIMENSIONS ARE IN MILLIMETERS

Richmond+Ross PTY LIMITED
CONSULTING ENGINEERS AND PROJECT LEADERS
ABN 34 001 485 436
38 WILLOUGHBY ROAD, CROWS NEST, NSW 2065
TEL : (02) 9490 9600 FAX : (02) 9438 1224

BUILDING OPTIONS

McDonald's Australia Limited
ABN. 43 008 496 928
T: +07 3630 3666
E: +devgroup-aust@au.mcd.com
NDG NATIONAL DEVELOPMENT GROUP

STATUS	DA ISSUE	DATE:	AUG 2018
SERIES	MOD 517	REF.	

UNMODIFIED MASTER DRAWING
PROJECT SPECIFIC DRAWING
© 2018 McDonald's

PROJECT: REF: 180202
PROPOSED McDONALD'S RESTAURANT AT HOLLOWS ROAD FLAGSTONE QLD

TITLE : LEGEND AND NOTES

DRAWN	CHECKED	SCALE	DWG. NO.	REV.
JK	SD	N/A	C001	A

GENERAL NOTES:

1. FOR LEGEND REFER DWG C001.
2. FOR STORMWATER SCHEDULES REFER DWG C110.
3. CAST IN VEHICLE DETECTOR LOOP TO BE TIED TO TOP SIDE OF STEEL REINFORCING FABRIC. MAINTAIN CONCRETE COVER TO DETECTOR LOOP IN ACCORDANCE WITH PAVEMENT DETAILS, REFER DWG C501.
4. B DENOTES BOLLARD. REFER DETAILS ON DWG C505.
5. IO TO BE BRASS.
6. ENSURE FALLS IN DDA CARSPACE AND SHARED AREAS DO NOT EXCEED 1:40 IN ANY DIRECTION.
7. GENERALLY, ENSURE FALLS IN CARPARK DO NOT EXCEED 1:20.
8. ENSURE CROSSFALL ON FOOTPATHS, MARKED PEDESTRIAN ACCESS PATHS AND THE RAISED WALKWAY IS BETWEEN 1:50 AND 1:80. FALLS IN THE DIRECTION OF TRAVEL SHALL BE AS SHOWN WITH A MAXIMUM OF 1:20.

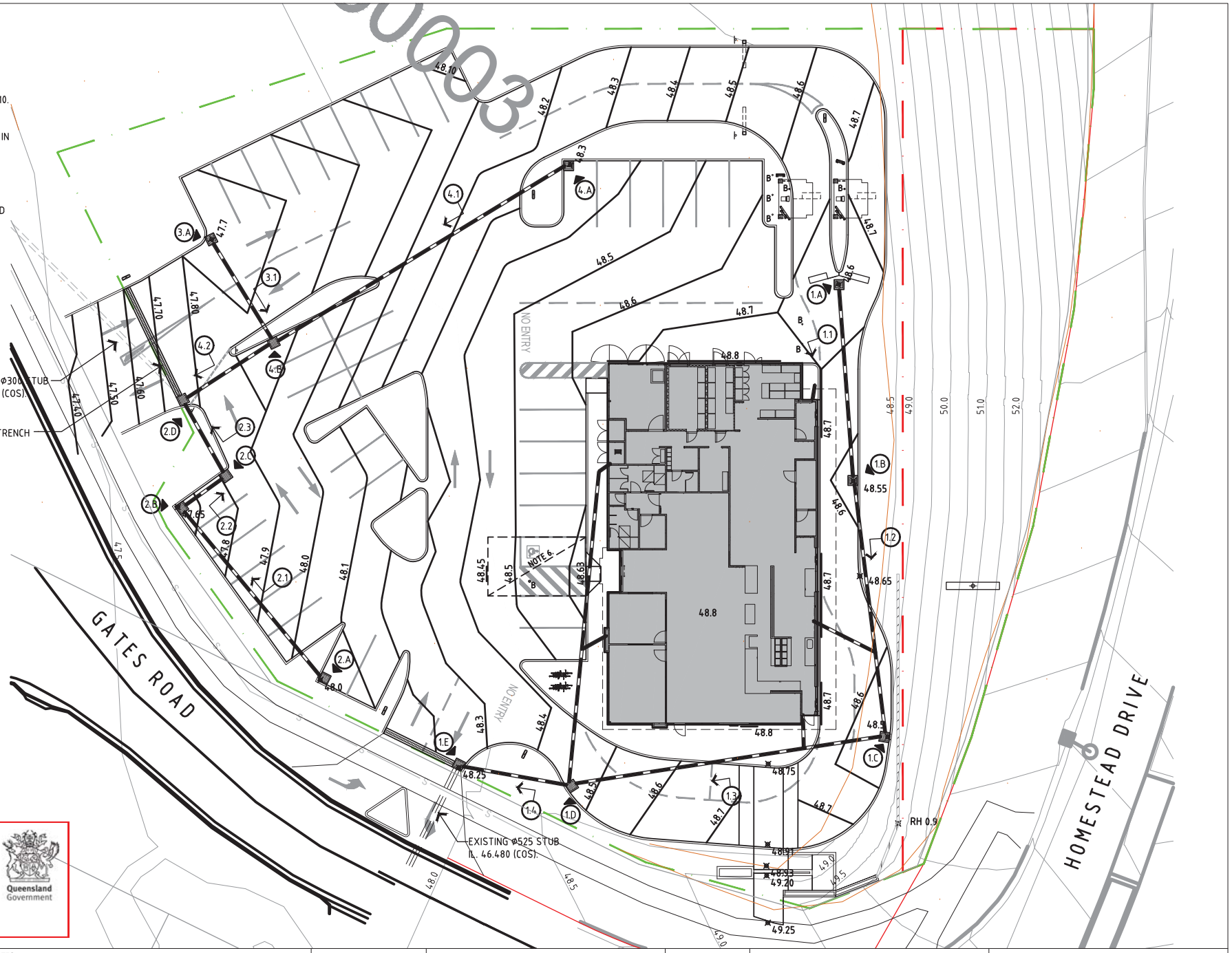

PLANS AND DOCUMENTS referred to in the PDA DEVELOPMENT APPROVAL

Approval no: DEV2019/1017

Date: 28 June 2019

Queensland Government

ISSUE	AMENDMENT	DATE	INT
A	DA ISSUE	15.02.2019	JK
B	DA ISSUE, DRAWING REVISED	01.03.2019	JK
C	LEVELS REVISED TO SUIT ACCESS	31.05.2019	JK

NOTES.

1. DO NOT SCALE THIS DRAWING.
2. THE DRAWING SHOWS DESIGN INTENT ONLY. ALL DIMENSIONS TO BE CHECKED ON SITE PRIOR TO CONSTRUCTION OR PRODUCTION. CONSTRUCTION DETAILS TO BE CONFIRMED BY CONTRACTOR /MANUFACTURER.
3. THIS IS A COMPUTER GENERATED DRAWING . DO NOT AMEND BY HAND.
4. FIGURE DIMENSIONS ARE TO BE USED. CONTACT ARCHITECT FOR CLARIFICATION IF DIMENSIONS ARE NOT CLEAR.
5. ALL DISCREPANCIES AND OMISSIONS ON SITE MUST BE REPORTED TO THE ARCHITECT FOR THEIR COMMENTS OR APPROVAL PRIOR TO COMMENCING WORK.
6. ALL DIMENSIONS ARE IN MILLIMETERS

Richmond + Ross PTY LIMITED
CONSULTING ENGINEERS AND PROJECT LEADERS
ABN 34 001 485 436
38 WILLOUGHBY ROAD, CROWS NEST, NSW 2065
TEL : (02) 9490 9600 FAX : (02) 9438 1224

BUILDING OPTIONS

McDonald's Australia Limited
ABN. 43 008 496 928
+07 3630 3666
+devgroup-aust@au.mcd.com
NDG NATIONAL DEVELOPMENT GROUP

PROJECT: REF: 180202
PROPOSED McDONALD'S RESTAURANT AT HOLLOWS ROAD FLAGSTONE QLD

STATUS: DA ISSUE | DATE: AUG 2018 | TITLE : CONCEPT DRAINAGE PLAN

SERIES: MOD 517 | REF.

UNMODIFIED MASTER DRAWING
PROJECT SPECIFIC DRAWING

© 2018 McDonald's

DRAWN	CHECKED	SCALE	DWG. NO.	REV.
JK	SD	1:300	C101	C

LINE SCHEDULE

TAG	UPSTREAM INVERT	SIZE	MATERIAL	LENGTH	GRADE (ACTUAL)	DOWNSTREAM INVERT
1.1	47.80	225	UPVC	14	1:100	47.66
1.2	47.64	225	UPVC	18	1:100	47.46
1.3	47.44	300	UPVC	22	1:100	47.22
1.4	47.20	300	UPVC	8	1:100	47.12
2.1	47.20	225	UPVC	16	1:40	46.80
2.2	46.78	225	UPVC	4	1:100	46.74
2.3	46.72	225	UPVC	6	1:100	46.66
3.1	46.85	225	UPVC	8	1:100	46.77
4.1	47.45	225	UPVC	24	1:50	46.97
4.2	46.75	300	UPVC	8	1:100	46.67

PIT SCHEDULE

TAG	TYPE	SIZE	RL TOP	INVERT	COVER
1.A	INLET	600 X 600	48.60	47.80	CLASS D INLET GRATE - HEELGUARD
1.B	INLET	900 X 600	48.60	47.64	CLASS D INLET GRATE - HEELGUARD
1.C	INLET	900 X 600	48.50	47.44	CLASS D INLET GRATE - HEELGUARD
1.D	INLET	900 X 900	48.48	47.20	CLASS D INLET GRATE - HEELGUARD
1.E	INLET	900 X 900	48.25	46.48	CLASS D INLET GRATE - HEELGUARD
2.A	INLET	600 X 600	48.00	47.20	CLASS D INLET GRATE - HEELGUARD
2.B	INLET	600 X 600	47.65	46.78	CLASS D INLET GRATE - HEELGUARD
2.C	INLET	900 X 600	47.80	46.72	CLASS D INLET GRATE - HEELGUARD
2.C	INLET	900 X 900	47.75	45.97	CLASS D INLET GRATE - HEELGUARD
3.A	INLET	900 X 600	47.70	46.85	CLASS D INLET GRATE - HEELGUARD
4.A	INLET	600 X 600	48.30	47.45	CLASS D INLET GRATE - HEELGUARD
4.B	INLET	900 X 600	47.85	46.75	CLASS D INLET GRATE - HEELGUARD

PLANS AND DOCUMENTS referred to in the PDA DEVELOPMENT APPROVAL

Approval no: DEV2019/1017

Date: 28 June 2019

Queensland Government

ISSUE	AMENDMENT	DATE	INT
A	DA ISSUE	15.02.2019	JK
B	DA ISSUE, DRAWING REVISED	01.03.2019	JK
C	LEVELS UPDATED TO SUIT NEW ENTRY	31.05.2019	JK

NOTES.

1. DO NOT SCALE THIS DRAWING.
2. THE DRAWING SHOWS DESIGN INTENT ONLY. ALL DIMENSIONS TO BE CHECKED ON SITE PRIOR TO CONSTRUCTION OR PRODUCTION. CONSTRUCTION DETAILS TO BE CONFIRMED BY CONTRACTOR /MANUFACTURER.
3. THIS IS A COMPUTER GENERATED DRAWING . DO NOT AMEND BY HAND.
4. FIGURE DIMENSIONS ARE TO BE USED. CONTACT ARCHITECT FOR CLARIFICATION IF DIMENSIONS ARE NOT CLEAR.
5. ALL DISCREPANCIES AND OMISSIONS ON SITE MUST BE REPORTED TO THE ARCHITECT FOR THEIR COMMENTS OR APPROVAL PRIOR TO COMMENCING WORK.
6. ALL DIMENSIONS ARE IN MILLIMETERS

Richmond+Ross PTY LIMITED
CONSULTING ENGINEERS AND PROJECT LEADERS
ABN 34 001 485 436
38 WILLOUGHBY ROAD, CROWS NEST, NSW 2065
TEL : (02) 9490 9600 FAX : (02) 9438 1224

BUILDING OPTIONS

McDonald's Australia Limited
ABN. 43 008 496 928
T: +07 3630 3666
E: +devgroup-aust@au.mcd.com
NDG NATIONAL DEVELOPMENT GROUP

PROJECT: REF: 180202
PROPOSED McDONALD'S RESTAURANT AT HOLLOWS ROAD FLAGSTONE QLD

STATUS: DA ISSUE | DATE: AUG 2018 | TITLE : DRAINAGE NOTES

SERIES: MOD 517 | REF.

UNMODIFIED MASTER DRAWING
PROJECT SPECIFIC DRAWING

© 2018 McDonald's

DRAWN	CHECKED	SCALE	DWG. NO.	REV.
JK	SD	N/A	C110	C

E & S CONTROL NOTES:

1. BUILDER IS RESPONSIBLE FOR ESTABLISHING AND MAINTAINING EROSION AND SEDIMENT CONTROL MEASURES. ALL MEASURES SHALL BE INSPECTED EACH WORKING DAY AND MAINTAINED AS REQUIRED. BUILDER IS RESPONSIBLE FOR ENGAGING AN APPROPRIATELY QUALIFIED PERSON PREPARE AND MAINTAIN THE E & S CONTROL PLAN TO MATCH METHOD OF WORKS.
2. BUILDER SHALL PROVIDE SEDIMENT FENCING MATERIAL DURING CONSTRUCTION TO THE LOW SIDE BOUNDARIES. TIE SEDIMENT FENCING MATERIAL TO CYCLONE WIRE SECURITY FENCE. SEDIMENT CONTROL FABRIC SHALL BE AN APPROVED MATERIAL (EG.HUMES PROPEX SILT STOP) STANDING 300 ABOVE GROUND AND EXTENDING 150 BELOW GROUND.
3. EXISTING AND NEW DRAINS LOCATED WITHIN THE SITE SHALL TO HAVE DROP INLET GRATE WRAPPED IN APPROPRIATE GEOTEXTILE FABRIC AND PLACED INTO POSITION WITHIN CONCRETE SURROUND.
4. NO PARKING OR STOCKPILING OF MATERIALS IS PERMITTED ON THE LOWER SIDE OF THE SEDIMENT FENCE.
5. GRASS VERGES SHALL BE MAINTAINED AS MUCH AS PRACTICAL TO PROVIDE A BUFFER ZONE TO THE CONSTRUCTION SITE.
6. ROOF DRAINAGE IS TO BE CONNECTED TO THE STORMWATER SYSTEM AS SOON AS PRACTICAL.
7. CONSTRUCTION ENTRY/EXITS SHALL BE AS PER DETAIL. BUILDER SHALL ENSURE ALL DROPPABLE SOIL AND SEDIMENT IS REMOVED PRIOR TO CONSTRUCTION TRAFFIC EXITING SITE. BUILDER SHALL ENSURE ALL CONSTRUCTION TRAFFIC ENTERING AND LEAVING THE SITE DO SO IN A FORWARD DIRECTION.
8 MATERIAL STOCKPILES (EG. SAND OR SOIL) SHALL BE CONTAINED WITHIN A SILT FENCE IN ACCORDANCE WITH 'SEDIMENT FENCE' DETAIL AND PLACED AT HIGH POINTS AWAY FROM STORMWATER FLOWS.
9. BUILDER TO INSTALL GRAVEL BAGS (AS DETAILED) WHERE REQUIRED.

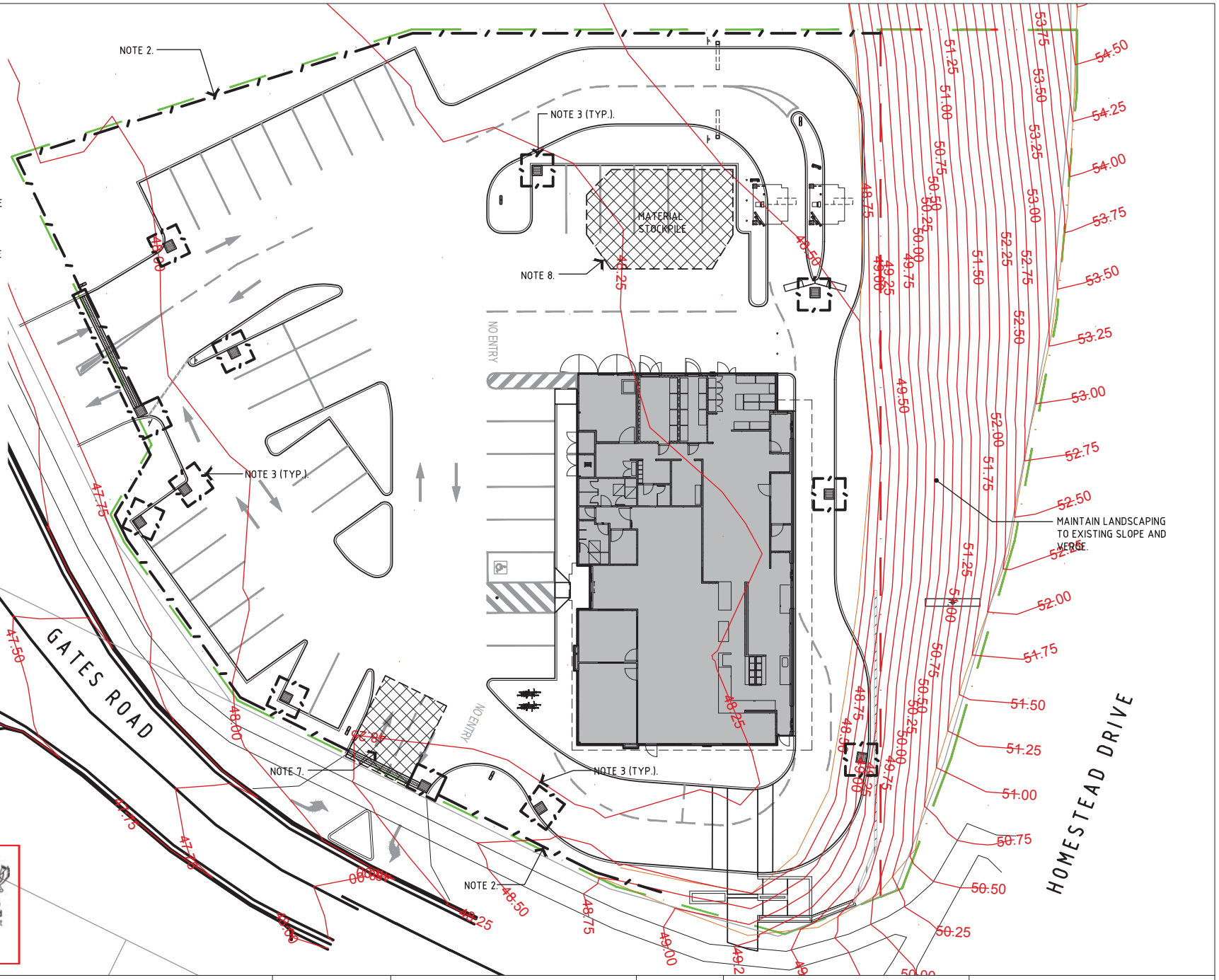

PLANS AND DOCUMENTS referred to in the PDA DEVELOPMENT APPROVAL

Approval no: DEV2019/1017

Date: 28 June 2019

Queensland Government

ISSUE	AMENDMENT	DATE	INT
A	DA ISSUE	15.02.2019	JK
B	DA ISSUE, DRAWING REVISED	01.03.2019	JK
C	DA ISSUE, DRAWING REVISED	31.05.2019	JK

NOTES.

1. DO NOT SCALE THIS DRAWING.
2. THE DRAWING SHOWS DESIGN INTENT ONLY. ALL DIMENSIONS TO BE CHECKED ON SITE PRIOR TO CONSTRUCTION OR PRODUCTION. CONSTRUCTION DETAILS TO BE CONFIRMED BY CONTRACTOR /MANUFACTURER.
3. THIS IS A COMPUTER GENERATED DRAWING . DO NOT AMEND BY HAND.
4. FIGURE DIMENSIONS ARE TO BE USED. CONTACT ARCHITECT FOR CLARIFICATION IF DIMENSIONS ARE NOT CLEAR.
5. ALL DISCREPANCIES AND OMISSIONS ON SITE MUST BE REPORTED TO THE ARCHITECT FOR THEIR COMMENTS OR APPROVAL PRIOR TO COMMENCING WORK.
6. ALL DIMENSIONS ARE IN MILLIMETERS

Richmond + Ross PTY LIMITED
CONSULTING ENGINEERS AND PROJECT LEADERS
ABN 34 001 485 436
38 WILLOUGHBY ROAD, CROWS NEST, NSW 2065
TEL : (02) 9490 9600 FAX : (02) 9438 1224

BUILDING OPTIONS

McDonald's Australia Limited
ABN. 43 008 496 928
+07 3630 3666
+devgroup-aust@au.mcd.com
NDG NATIONAL DEVELOPMENT GROUP

PROJECT: REF: 180202
PROPOSED McDONALD'S RESTAURANT AT HOLLOWS ROAD FLAGSTONE QLD

STATUS: DA ISSUE | DATE: AUG 2018 | TITLE: CONCEPT E & S CONTROL PLAN

SERIES: MOD 517 | REF. | UNMODIFIED MASTER DRAWING | PROJECT SPECIFIC DRAWING

© 2018 McDonald's

DRAWN	CHECKED	SCALE	DWG. NO.	REV.
JK	SD	1:300	C301	C

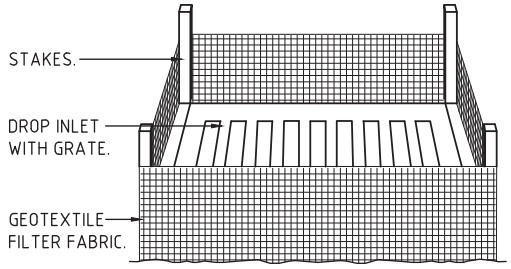

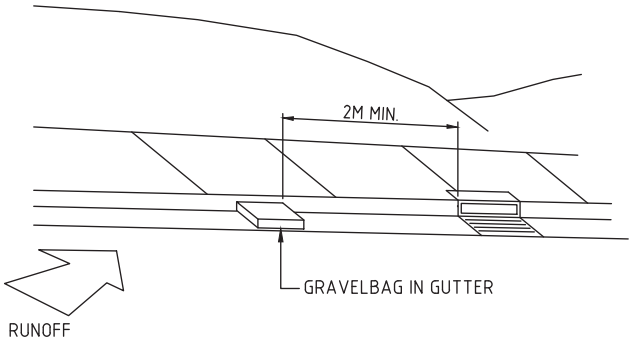

GRAVELBAG KERB SEDIMENT TRAP

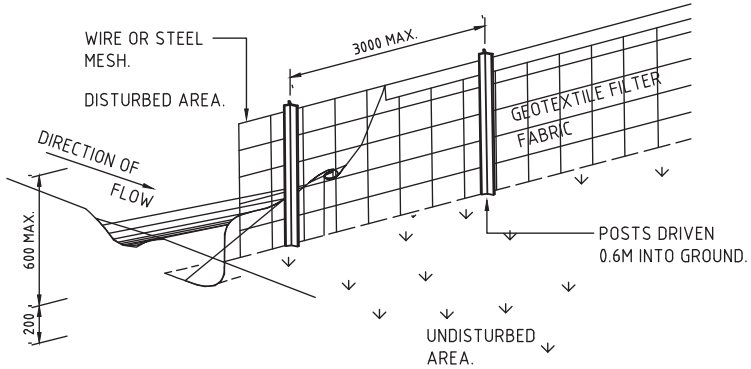

SEDIMENT FENCE

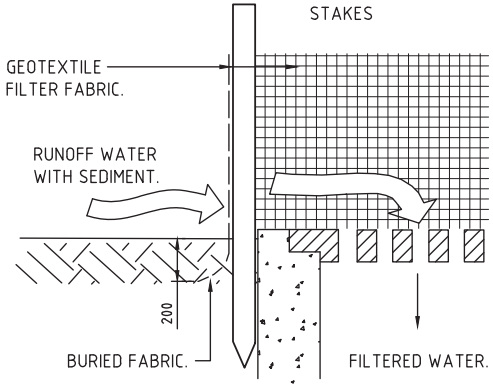

SEDIMENT TRAP TO STORMWATER SUMP

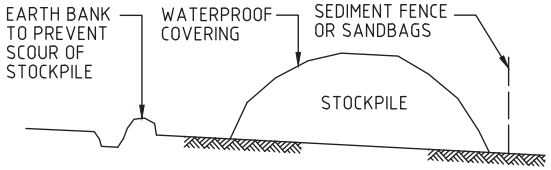

BUILDING MATERIAL STOCKPILES

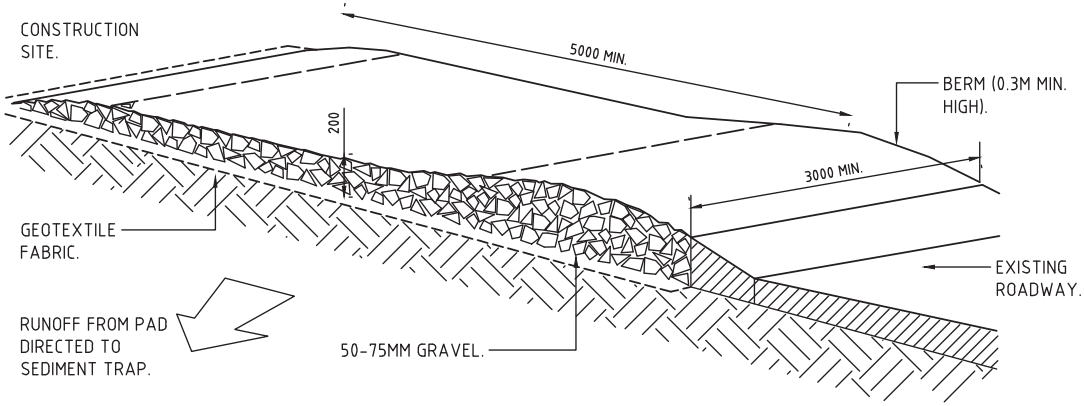

TEMPORARY CONSTRUCTION EXIT

PLANS AND DOCUMENTS referred to in the PDA DEVELOPMENT APPROVAL

Approval no: DEV2019/1017

Date: 28 June 2019

Queensland Government

ISSUE	AMENDMENT	DATE	INT
JK	DA ISSUE	15.02.2019	JK

NOTES.

1. DO NOT SCALE THIS DRAWING.
2. THE DRAWING SHOWS DESIGN INTENT ONLY. ALL DIMENSIONS TO BE CHECKED ON SITE PRIOR TO CONSTRUCTION OR PRODUCTION. CONSTRUCTION DETAILS TO BE CONFIRMED BY CONTRACTOR /MANUFACTURER.
3. THIS IS A COMPUTER GENERATED DRAWING . DO NOT AMEND BY HAND.
4. FIGURE DIMENSIONS ARE TO BE USED. CONTACT ARCHITECT FOR CLARIFICATION IF DIMENSIONS ARE NOT CLEAR.
5. ALL DISCREPANCIES AND OMISSIONS ON SITE MUST BE REPORTED TO THE ARCHITECT FOR THEIR COMMENTS OR APPROVAL PRIOR TO COMMENCING WORK.
6. ALL DIMENSIONS ARE IN MILLIMETERS

Richmond+Ross PTY LIMITED
CONSULTING ENGINEERS AND PROJECT LEADERS
ABN 34 001 485 436
38 WILLOUGHBY ROAD, CROWS NEST, NSW 2065
TEL : (02) 9490 9600 FAX : (02) 9438 1224

BUILDING OPTIONS

McDonald's Australia Limited
ABN. 43 008 496 928
T: +07 3630 3666
E: +devgroup-aust@au.mcd.com
NDG NATIONAL DEVELOPMENT GROUP

STATUS	DA ISSUE	DATE:	AUG 2018
SERIES	REF.	UNMODIFIED MASTER DRAWING / PROJECT SPECIFIC DRAWING	
MOD 517			

© 2018 McDonald's

PROJECT: REF: 180202

PROPOSED McDONALD'S RESTAURANT AT HOLLOWS ROAD FLAGSTONE QLD

TITLE :SEDIMENTATION & EROSION CONTROL DETS.

DRAWN	CHECKED	SCALE	DWG. NO.	REV.
JK	SD	N/A	C310	A